FOREST GROVE OREGON

A place where businesses and families thrive.

City of Forest Grove
Light & Power
Electric System Master Plan
July 2013

Prepared for:
George Cress
Light & Power Director

TriAxis Engineering, Inc.

TriAxis Engineering, Inc.
301 NE 117th Avenue
Vancouver, WA 98684
Michael Beanland, P.E.

REGISTERED PROFESSIONAL ENGINEER 18,947PE
DIGITAL SIGNATURE
OREGON
MARCH 18, 1997
MICHAEL DAVID BEANLAND
EXPIRES: 12/31/2013

Background

The City of Forest grove retained TriAxis Engineering to review a City-developed multi-year substation improvement plan and recommend a comprehensive electric system upgrade plan.

Executive Summary

This Plan recommends the staged replacement of aged major power equipment at Forest Grove substations. This includes three power transformers and several circuit breakers. The proposed Plan will provide improved equipment reliability, provide adequate capacity for reasonable load growth, and lay out a path to accommodate future city service expansion.

Year	Actions	Budget
2013-14	Engineer for the replacement of transformers at Forest Grove and Thatcher; purchase the transformer, circuit switcher, and associated equipment for Thatcher; purchase and install feeder relays at Filbert	$1,050k
2014-15	Install the transformer, circuit switcher and associated equipment at Thatcher, purchase the transformers, circuit switchers, and associated equipment for Forest Grove #1 & #2, install 115kV protection upgrades with BPA	$2,530k
2015-16	Install the transformer, circuit switcher and associated equipment for Forest Grove #2	$230k
2016-17	Install the transformer, circuit switcher and associated equipment for Forest Grove #1	$215k
2017-18	Purchase and install circuit switcher and associated equipment for Filbert Substation	$270k
	Five Year Total	$4,295k

Data Resources

The City provided TriAxis with data regarding the existing electrical facilities including:

- Equipment inventories for the Filbert, Thatcher Junction and Forest Grove Substations
- Detailed distribution system maps.
- Substation simplified one-line diagrams.

- System overview one-line diagram.
- Mapping system databases including primary and secondary conductors, distribution transformers, shunt capacitors, and electric meters.

TriAxis was provided access to historic power use data for the four BPA points of delivery. TriAxis accessed aggregate hourly load data from 1/1/2000 through 12/31/2012; monthly energy data for each POD for the same period; and hourly load data for each POD for calendar 2012.

Review of Data

Aggregate load data indicates that there has been a slight decline in average load for the City over the past 12 years.

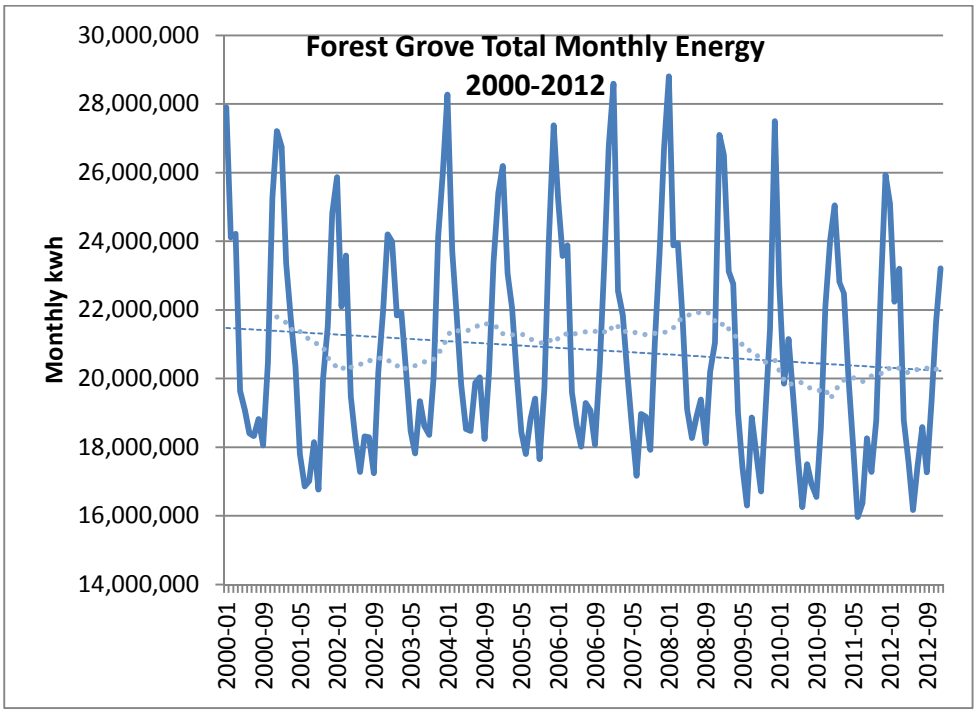

(bold line is monthly data, dashed wavy line is smoothed annual data, straight line is linear trend)

Similarly, daily peak loads have been on a decline during the same interval.

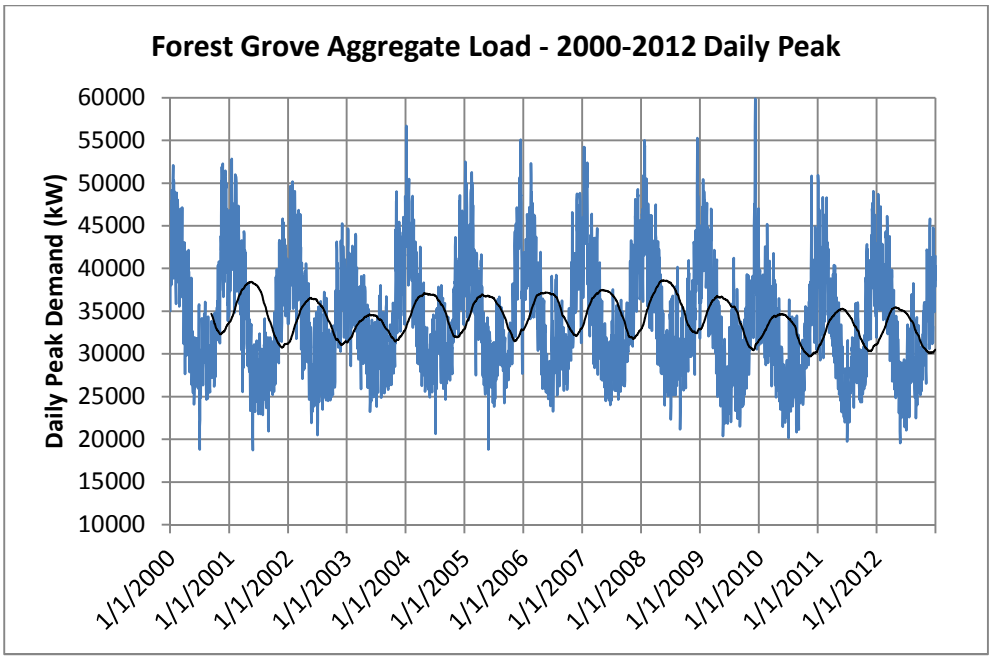

(bold band is daily data, black wave is smoothed annual trend)

During this same period, the loading of the four points of delivery have remained relatively equal.

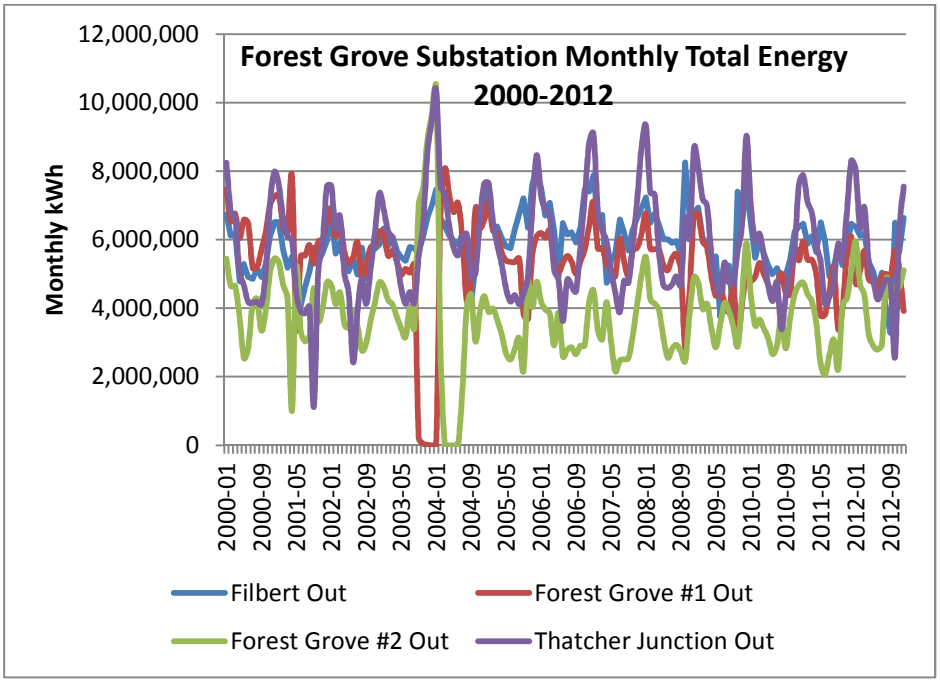

(each colored band represents the monthly energy delivery through one substation transformer)

The hourly data for 2012 also indicates a relatively equal sharing of load with Forest Grove bank #2 carrying a smaller typical load that the other transformers.

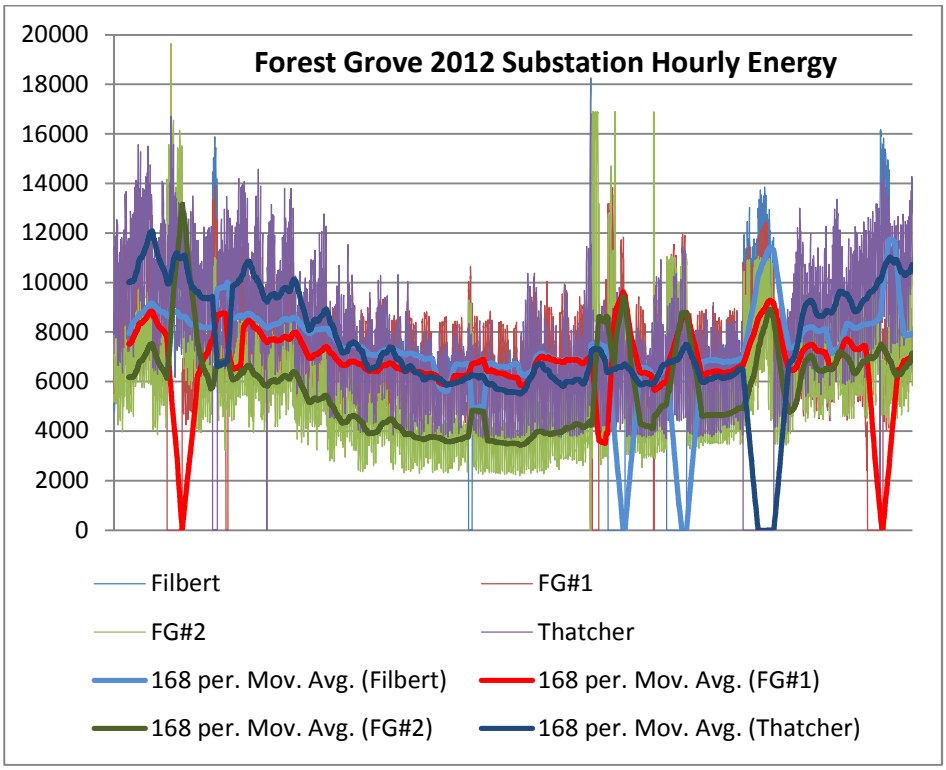

(broad jagged bands are hourly data for each substation, bold lines are weekly smoothed average)

Substation Equipment Vintages

Data provided by the City was assembled in the following tables. Estimates of remaining life were developed using common utility industry equipment life estimates: 40 years for transformers, 30 years for circuit breakers, and 20 years for voltage regulators. Actual equipment life is very complex to determine and depends on many factors including historic maintenance, local environment, loading history, typical operating temperatures, available fault current, and the number of operations or through faults; as a result, typical values are used for comparison only.

Forest Grove					
Equipment	Mfg. Model	Mfg. SS #	Mfg. Year	Age	Remaining Life
Power Transformer Bank 1	Industrie Elettriche Di Legnano S.p.A. 12/16/20/22.4 MVA	31715	1975	37 Yrs	3
Power Transformer Bank 2	Industrie Elettriche Di Legnano S.p.A. 12/16/20/22.4 MVA	31208	1968	44 Yrs	**(4)**
Bank 1 Main Breaker	ABB RMAG	1VAL05L117RMAG	11/05	7 Yrs	23

Bank 2 Main Breaker	ABB RMAG	VAL05L118RMAG	11/05	7 Yrs	23
FG1 Voltage Regulators	McGraw-Edison VR-32 Series AX	A Phase 0337017756 B Phase 0337017755 C Phase 0337017670	11/03	9 Yrs	11
FG2 Voltage Regulators	McGraw-Edison VR-32 Series AX	A Phase 0437009089 B Phase 0437008773 C Phase 0437008855	5/04	8 Yrs	12
FG1 Feeder Breaker	ABB, Vacuum, Type R2	93K115VB	10/93	19 Yrs	11
FG2 Feeder Breaker	Westinghouse, Vacuum, Type R1	88D119VB	4/88	24 Yrs	6
FG3 Feeder Breaker	GE Vacuum, Type VIB-15.5-12000-4	0442A8170-101	9/81	31 Yrs	**(1)**
FG4 Feeder Breaker	Westinghouse, Vacuum, Type R1	88D117VB	4/88	24 Yrs	6
FG5 Feeder Breaker	Westinghouse, Vacuum, Type R1	8D122VB	4/88	24 Yrs	6
FG6 Feeder Breaker	GE Vacuum, Type VIB-15.5-12000-3	Not available	1975	37 Yrs	**(7)**
FG7 Feeder Breaker	GE Vacuum, Type VIB-15.5-12000-3	Not available	11/76	36 Yrs	**(6)**
FG8 Feeder Breaker	GE Vacuum, Type VIB-15.5-12000-3	Not available	1975	37 Yrs	**(7)**

Thatcher					
Equipment	Mfg. Model	Mfg. SS #	Mfg. Year	Age	Remaining Life
Power Transformer	Moloney 12/16/20/22.4 MVA	929842	1959	53 Yrs	**(13)**
Main Breaker	ABB RMAG	1YAL05K150RMAG	10/06	6 Yrs	24
Three-phase Voltage Regulator	General Electric MLT 32	D569383	No Data		
Feeder Breaker	ABB Type R1	Feeder A 99F149VBBT, Feeder B 99F164VBBT, Feeder C 99F156VBBT, Feeder D 99F153VBBT	9/99	13 Yrs	7

Filbert					
Equipment	Mfg. Model	Mfg. SS #	Mfg. Year	Age	Remaining Life
Power Transformer Bank	Hevi-Duty Electric 15/20/25 MVA	GM 353876	11/83	29 Yrs	11
Single Phase Voltage Regulators	Siemens Type JFR	A Phase 6587-6, B Phase 6520-9, C Phase 6422-7	No Data		

Feeder Breakers	Westinghouse Vacuum	BFS6 84C153VB, BFS8 84C154VB, BFS9 84C151VB, BFS10 84C155VB, BFSM 84D101VB	3/84	~29 Yrs	**1**

The data indicates that three of the power transformers have reached the end of their usable lives and that several feeder breakers are due for replacement.

Optimal Transformer Rating

The draft plan developed by the City included the purchase of substation transformers rated 24/32/40/45 MVA. Transformer rating numbers indicate the following:

- Operation with 55C temperature rise and no fan cooling
- Operation with 55C temperature rise and one stage of fan cooling
- Operation with 55C temperature rise and two stages of fan cooling
- Operation with 65C temperature rise and two stages of fan cooling

Three of the existing substation transformers are 12/16/20/22.4 MVA and one (Filbert) is 15/20/25/28 MVA rated. Because City-wide peak load has never exceeded 60 MW and there is minimal/no load growth, TriAxis recommends the City purchase transformers rated 15/20/25/28 MVA 55/65C. Four such transformers provide 60 MVA (4 x 15 MVA) of base rating and a single-contingency rating of 84 MVA (loss of one transformer) which would appear more than sufficient.

Further, the City load is winter peaking and the thermal rating of substation transformers increases about 1% for each 1C that the average ambient temperature is below 30C. The graphic below was extracted from a U S Bureau of Reclamation publication based on industry standards.

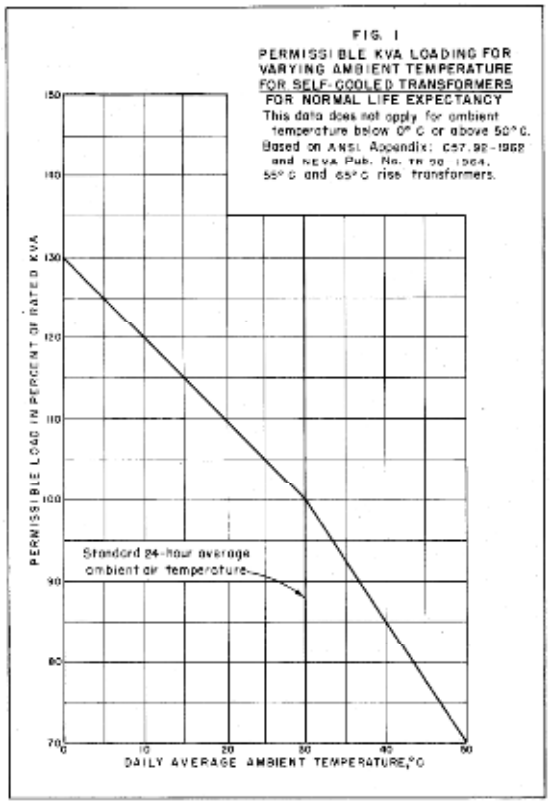

USBR Transformer Loading Guide

The following chart shows Forest Grove daily peak electricity demand versus daily average temperature for three years. The strong weather sensitivity of the peak demand is apparent.

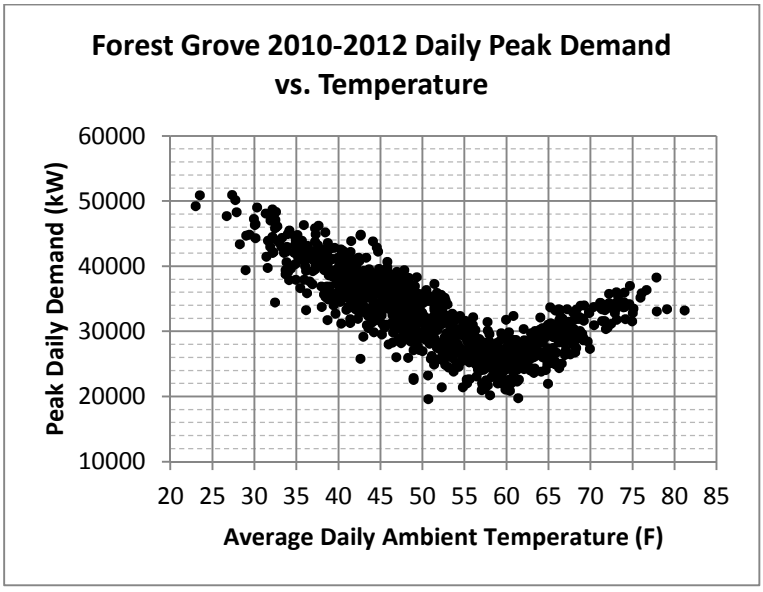

Forest Grove Peak Load and Ambient Temperature

Transformers are rated for operation at 30C (86F) ambient yet Forest Grove peak loads occur when ambient is below 0C (32F). Thus, during peak loads, when ambient temperature is 0C (32F), total transformer base rating is ~78 MVA (1.3 x 60 MVA) and single-contingency rating is ~109 MVA (1.3 x 84 MVA). This is significantly more than the 60 MW of actual historic peak load.

The following table existing and proposed transformer capacity at the substations under different approaches to substation capacity. The options considered were to purchase three new large transformers, purchase three smaller transformers, and to purchase three smaller transformers now and add a 2nd transformer at Filbert to Thatcher in the future as load requires. All of the plans provide capacity for significant future load growth.

Description	Existing Substation Equipment	Purchase Three 24 MVA	Purchase Three 15 MVA	Add future 15 MVA
Forest Grove #1	12/16/20/22.4 Circa 1975	24/32/40/45	15/20/25/28	15/20/25/28
Forest Grove #2	12/16/20/22.4 Circa 1968	24/32/40/45	15/20/25/28	15/20/25/28
Filbert #1	15/20/25/28 Circa 1983	Same	Same	Same
Thatcher #1	12/16/20/22.4 Circa 1959	24/32/40/45	15/20/25/28	15/20/25/28
Filbert/Thatcher #2	----	----	----	15/20/25/28
Base Capacity (MVA)	51	87	60	75
Summer SC Peak Rating (MVA)	67	118	84	112
Winter SC Peak Rating (MVA)	87	153	109	146
Winter Capacity Increase	----	76%	25%	67%
Winter Peak Margin (MVA)	27	93	49	86
Winter Peak Growth	146%	256%	182%	243%
Installed Cost	----	$3,500k	$2,300k	Add $1,700k

(SC is single contingency, one transformer out of service)

During lengthy discussions with City staff, it was generally agreed that the preferred approach is to purchase smaller transformers for the upgrades with the understanding that should future load develop, added capacity can be installed at Filbert Substation, Thatcher Substation, and/or a new substation.

Voltage Regulation

The existing substations include transformers without tap changers and separate voltage regulators. When the substations were built, the transformers were owned by BPA and the City was responsible for any voltage regulation. As a result, the substations have separate transformers and voltage regulators. Further, 30+ years ago, transformer internal load tap changers were of a design where maintenance was frequent and significant.

The largest standard single-phase voltage regulator made is rated 833kVA, providing regulation for up to 25MVA of load. When transformer capacity or load exceeds this level, transformer load tap changers or feeder-level voltage regulation is required. Load tap changers are part of the transformer and new designs are extremely reliable, but do require the transformer be taken out of service for maintenance. Voltage regulators can be bypassed while the transformer continues to serve load, though without voltage regulation. Where peak loads are not expected to exceed 25MVA, voltage regulators are often preferred by many utilities.

Where loads exceed 25MVA on a single transformer, feeder voltage regulation is used by many utilities. In this situation, rather than a transformer load tap changer or single central voltage regulator, each feeder uses a set of regulators, typically between the feeder breaker and getaway cables, to provide voltage control. The advantage is that each regulator is generally smaller (less costly) and any regulator can be removed from service conveniently. The disadvantage is that there are more pieces of equipment to maintain, three regulators per feeder.

Voltage regulators are mechanical devices with load-carrying switches in oil. These devices require periodic maintenance and special care when switching into and out of service. Though Forest Grove substations are designed and equipped for voltage regulators, with the opportunity to replace the existing transformers, a switch to the reduced maintenance requirements of modern load tap changers is recommended.

Equipment Replacement Plan

Based solely on the vintage data provided above, TriAxis suggests the following approximate replacement schedule:

Equipment	2013	2014	2015	2016	2017	2018	2019
Transformer							
Thatcher Transformer	EP	I					
Forest Grove Bank 2	E	P	I				
Forest Grove Bank 1	E	P		I			
Feeder Breakers							
Forest Grove GE Breakers	E	P	PI	I			
Ongoing Breaker Replacement					EPI		EPI

E= Engineer, P = Procure, I = Install

When transformers are replaced, the recommended work includes installation of a circuit switcher and transformer protective relaying. When feeder breakers are replaced, the recommended work includes replacement of the associated protective relaying.

Circuit Switchers

A circuit switcher is a simplified circuit breaker (no current transformers) that can interrupt faults and provide for remote switching. Circuit switchers replace fuses used for fault interruption. Because the circuit switcher is controlled by microprocessor-based protective relays, the relay/switcher combination provides much greater flexibility and control than the simple fuses.

A typical 115kV circuit switcher costs about $50,000. Installation of a circuit switcher to replace transformer fuses also requires a controls enclosure, station battery, battery charger, protective relay(s), and the presence of current transformers on the transformer. Preferred protective relaying includes “current differential” which compares the current coming into the transformer from the current leaving the transformer; such relaying is very sensitive to transformer faults. Because Forest Grove substations also have “main breakers,” the differential zone can be expanded to encompass some of the substation bus, providing improved protection from substation faults.

A circuit switcher not only provides better fault detection and protection but provides safety improvements. Protective relays can be used in an arc flash hazard reduction program in conjunction with hot line tagging. The remotely-controlled circuit switcher also makes energizing and de-energizing the transformer safer by allowing the operator to be farther from the device. The addition of microprocessor-based protective relays can provide a wealth of fault event, troubleshooting data, and remote access.

When a new transformer is purchased the cost of a circuit switcher and associated equipment is recommended; such costs are included with the transformer replacement.

Warning: The Western Electricity Coordinating Council (WECC) rules require that transformer protective systems that may impact the bulk electric system must be maintained and tested on a regular basis with full documentation. The impact on utility operations of relay and circuit switcher testing is not significant, however, batteries and battery chargers require frequent (3-month interval) testing which needs to be planned and budgeted.

Future City Expansion

One concern raised by utility staff was that the utility district is larger than the city boundary and that there are un-developed and under-developed portions of the city. The possible impact of unexpected load growth is mitigated by both the Thatcher Junction and Filbert Substations having adequate land and being arranged so that a second transformer and additional feeder capacity can be readily added. This allows capacity to be expanded as load requires.

During discussions with staff, it was the general consensus that should additional capacity be required, adding transformers at Filbert and Thatcher is preferred over installing additional capacity at this time. In this fashion, capacity can be added when, and if, needed.

In addition, should the service area of the utility expand with significant new high-density load (industrial), it is appropriate to build a fourth substation to serve the expanded service area. It is reasonable that growth north of the city could be fed by a new substation and served by a new tap to the BPA Forest Grove – Tillamook 115kV line. Should there be significant load growth and development in this area, the City would need to work with developers to procure an appropriate substation parcel. (See annotated Comprehensive Plan Map)

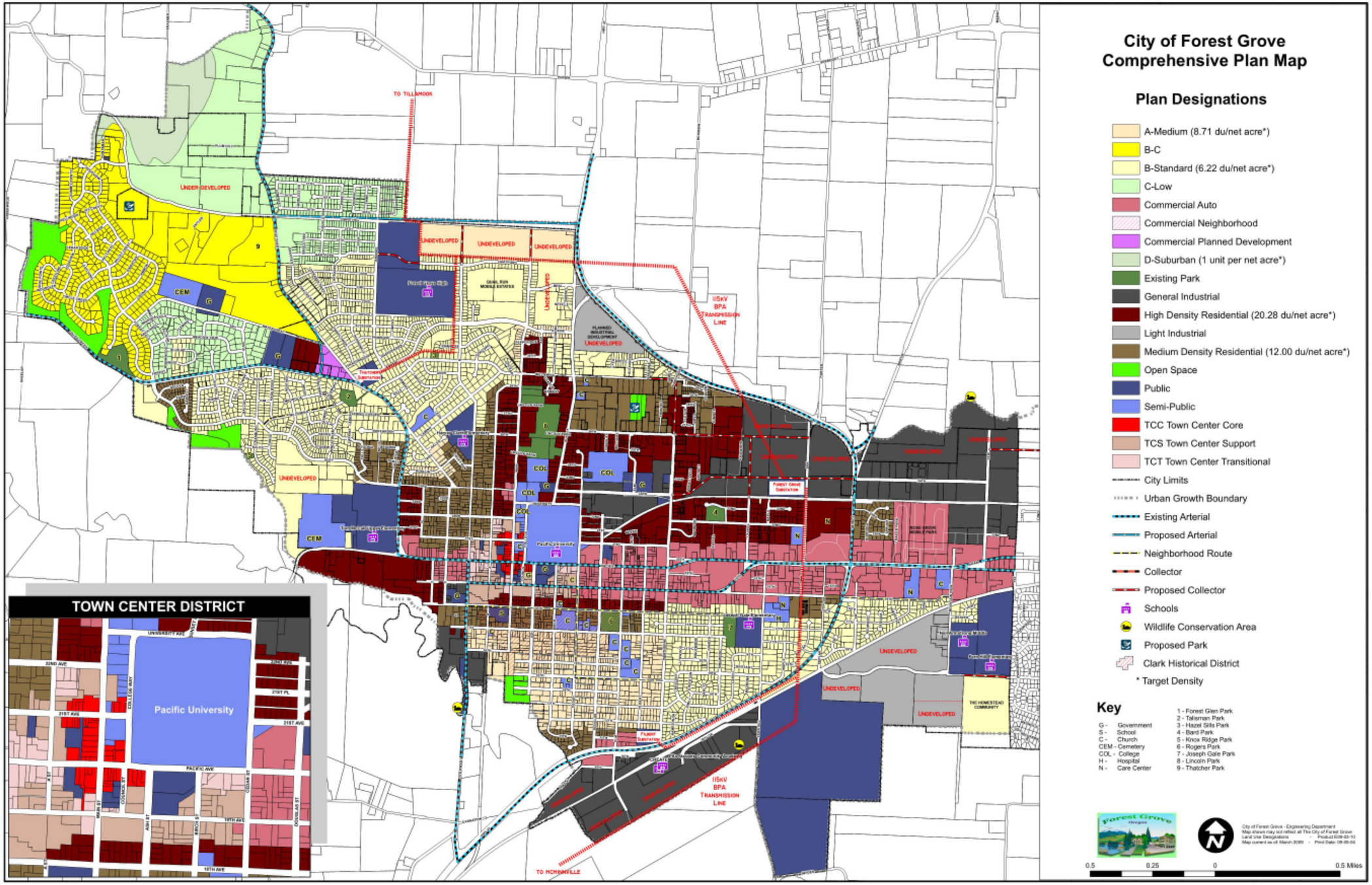
City of Forest Grove
Comprehensive Plan Map
Plan Designations
A-Medium (8.71 du/net acre*)
B-C
B-Standard (6.22 du/net acre*)
C-Low
Commercial Auto
Commercial Neighborhood
Commercial Planned Development
D-Suburban (1 unit per net acre*)
Existing Park
General Industrial
High Density Residential (20.28 du/net acre*)
Light Industrial
Medium Density Residential (12.00 du/net acre*)
Open Space
Public
Semi-Public
TCC Town Center Core
TCS Town Center Support
TCT Town Center Transitional
City Limits
Urban Growth Boundary
Existing Arterial
Proposed Arterial
Neighborhood Route
Collector
Proposed Collector
Schools
Wildlife Conservation Area
Proposed Park
Clark Historical District
* Target Density
Key
G - Government
S - School
C - Church
CEM - Cemetery
COL - College
H - Hospital
N - Care Center
1 - Forest Glen Park
2 - Talisman Park
3 - Hazel Sills Park
4 - Bard Park
5 - Knox Ridge Park
6 - Rogers Park
7 - Joseph Gate Park
8 - Lincoln Park
9 - Thatcher Park
TOWN CENTER DISTRICT
Pacific University
TO TILLAMOOK
TO MCMINNVILLE
115KV BPA TRANSMISSION LINE
UNDEVELOPED
0.5
0.25
0
0.5 Miles

115kV Transmission System

City staff has expressed concern about interruptions to the BPA 115kV transmission system affecting City substations. The Filbert Substation is located on the 24-mile 115kV line between BPA Forest Grove and BPA McMinnville. The Thatcher Junction Substation is located on the 47 mile 115kV line from Forest Grove to Tillamook Substation.

Staff reports that it is not uncommon to have repeated winter-time storm-related outages to the Thatcher Junction Substation as BPA tests and restores the 115kV line from Forest Grove to Tillamook. Staff reports that outages to the Filbert Substation are rare.

Outage Data

A review of line outage data is recommended to quantify the number of outages and their duration. This data from BPA was not available for this study.

Existing 115kV BPA Lines

The following diagram shows the BPA/City 115kV lines.

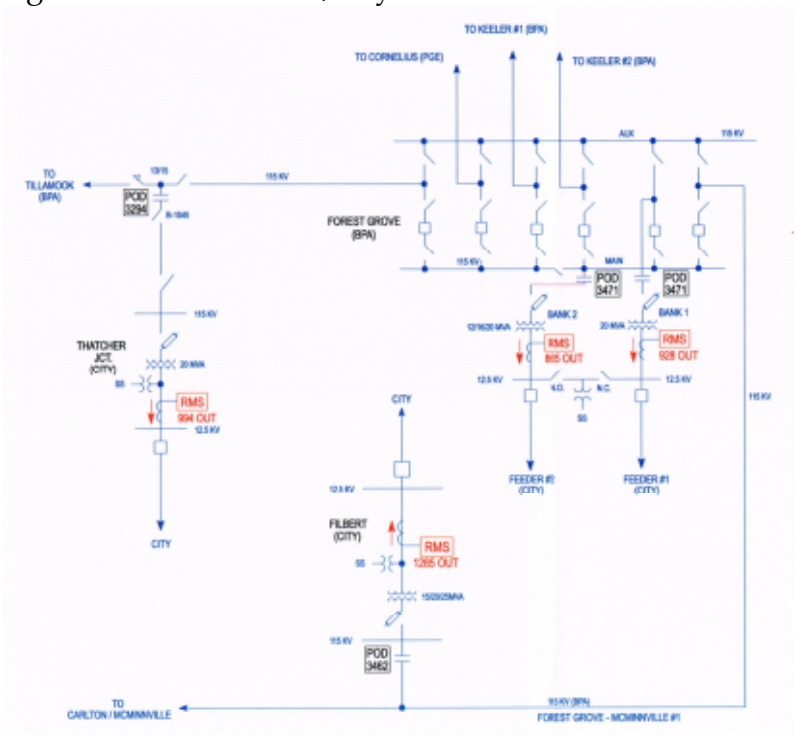

BPA Forest Grove Power Delivery System

Line to Tillamook

For the Forest Grove – Tillamook line, the following line segments exist.

Line Segment	Distance (miles)
Forest Grove - Thatcher Tap	1.9
Thatcher Tap – Timber tap	8
Timber Tap – South Fork	12
South Fork - Tillamook	25

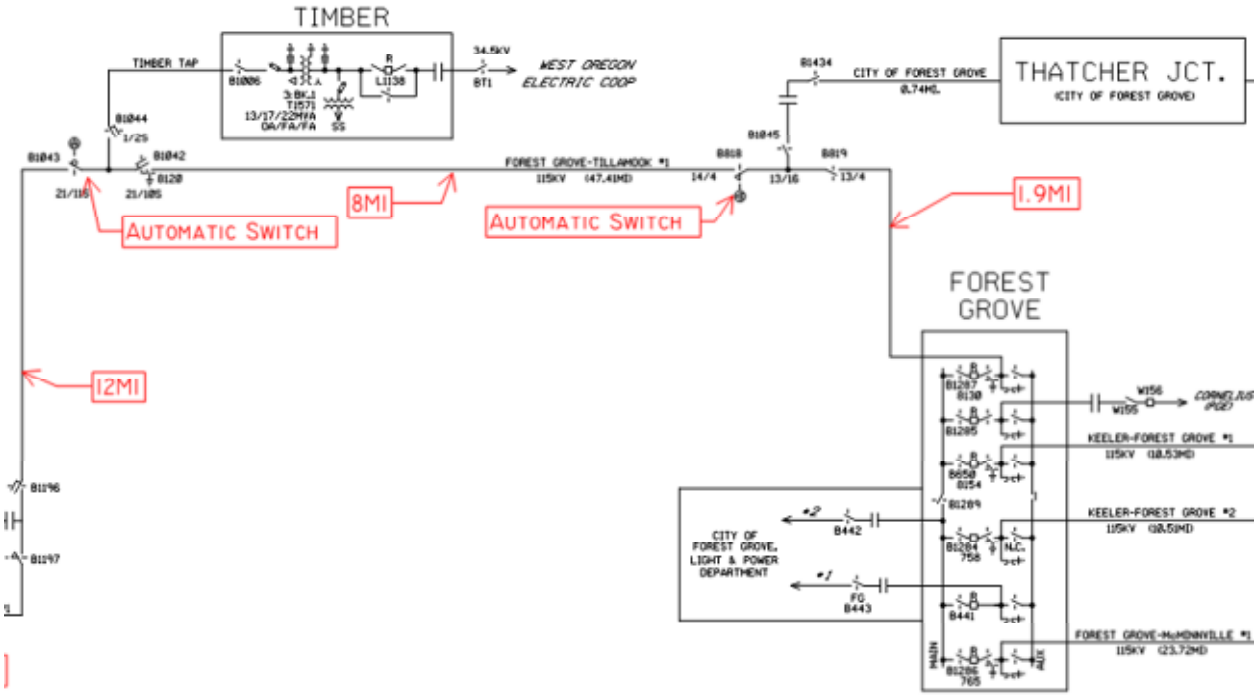

BPA 115kV Transmission North & West

The line segments from the Timber tap to Tillamook Substation are much more exposed to winter-time storm-related faults than the lines from Forest Grove to the Timber tap. BPA switch B818 is located just beyond the Thatcher Tap, providing a location to sectionalize the line when an outage occurs. This is a motor-operated switch with automatic operation when the line is de-energized after a fault. A similar switch exists just beyond the Timber tap. During a fault, the 115kV circuit breakers at Forest Grove and Tillamook open, the two automatic switches open when the line is de-energized, the two breakers close, Thatcher and South Fork are restored, Timber remains de-energized.

However, as BPA attempts to restore the line, when the automatic switches are closed, the circuit breaker at Forest Grove Substation may operate if the fault persists. Given the long distances and difficult in locating faults, staff reports that BPA breaker operations upon restoration are common.

Line to McMinnville

The Filbert Substation is tapped from a ~19 mile line between Forest Grove and Carlton substations. This line extends further to McMinnville and Baker Creek substations.

Line Segment	Distance
Forest Grove - Filbert Tap	0.7
Filbert Tap – Carlton	18.5
Carlton – McMinnville	5.2
McMinnville - Baker Creek	15.6

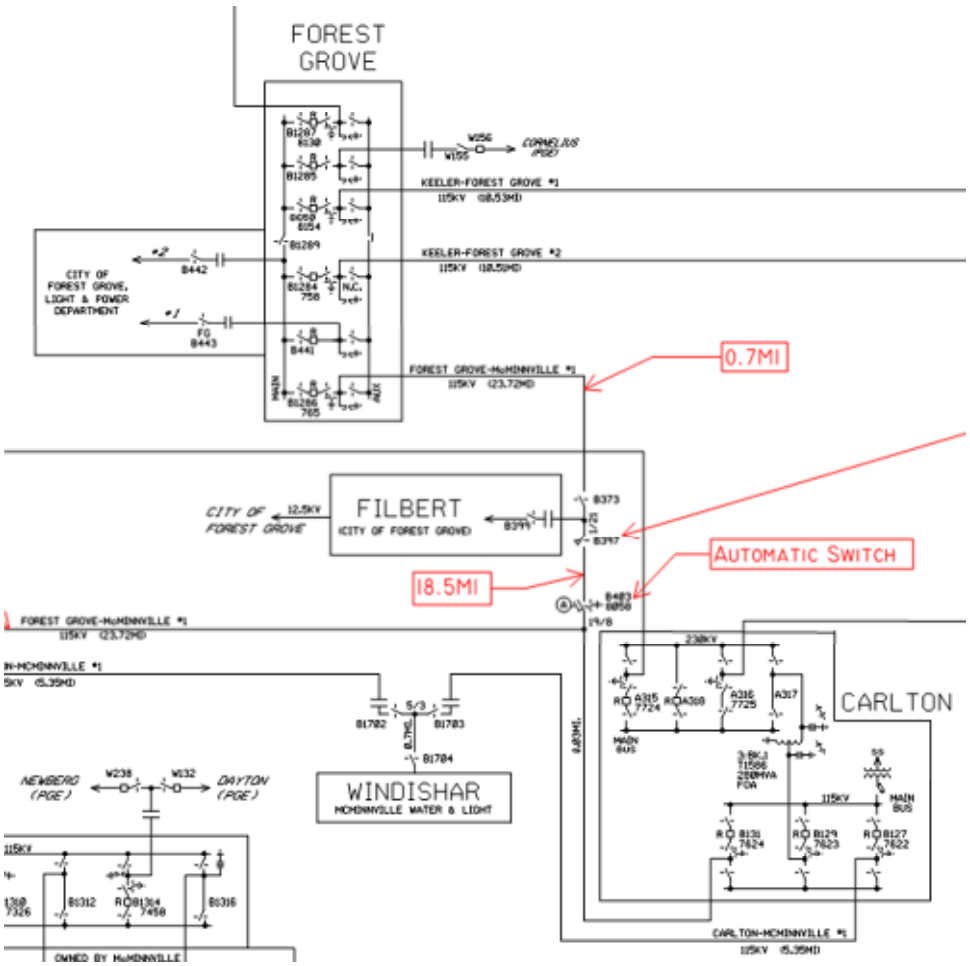

BPA 115kV Transmission South

Outages along this line cause the automatic switch near Carlton to open so that Forest Grove can re-energize the line. There is risk that the 18.5 mile segment has a fault and Filbert will remain out of service.

Options for Improved Reliability

The initial plan developed by City staff including studying the installation of 115kV lines from the Forest Grove Substation to both Thatcher Substation and Filbert Substation and thus no longer being susceptible to outages on the BPA lines. The City could build a line parallel to the BPA-Tillamook line for a distance of 1.9 miles to refeed the Thatcher tap. Similarly, the City could build a 0.8 mile line from Forest Grove to the existing Filbert tap parallel to the BPA Forest Grove – Carlton line. However, in addition to 115kV line construction through the city, the City portion of the Forest Grove Substation would require major remodeling and rearrangement.

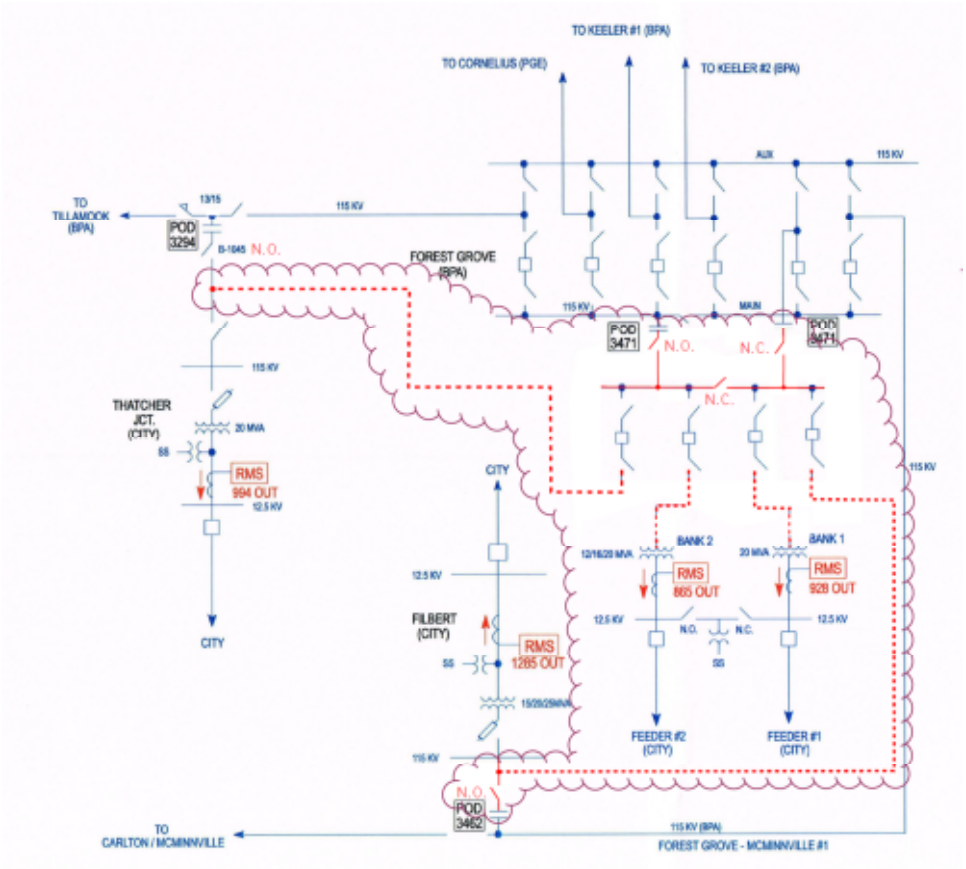

At Forest Grove Substation, the City would need to build a 6-position 115kV switching station. Two incoming positions would replace the existing BPA 115kV feeds to the

Forest Grove transformers. Two new circuit breakers would feed the Forest Grove transformers and two new circuit breakers would feed the Filbert and Thatcher substations. The Forest Grove Substation transformers and main breakers would be relocated.

Forest Grove Substation - Existing

The above aerial photograph shows the existing BPA and City portions of the Forest Grove Substation. The BPA 115kV facility is on the right. The City-owned transformers are in the center. The City's voltage regulators and feeder breakers are on the left.

A revised and expanded City 115kV facility at Forest Grove Substation may look similar to the following.

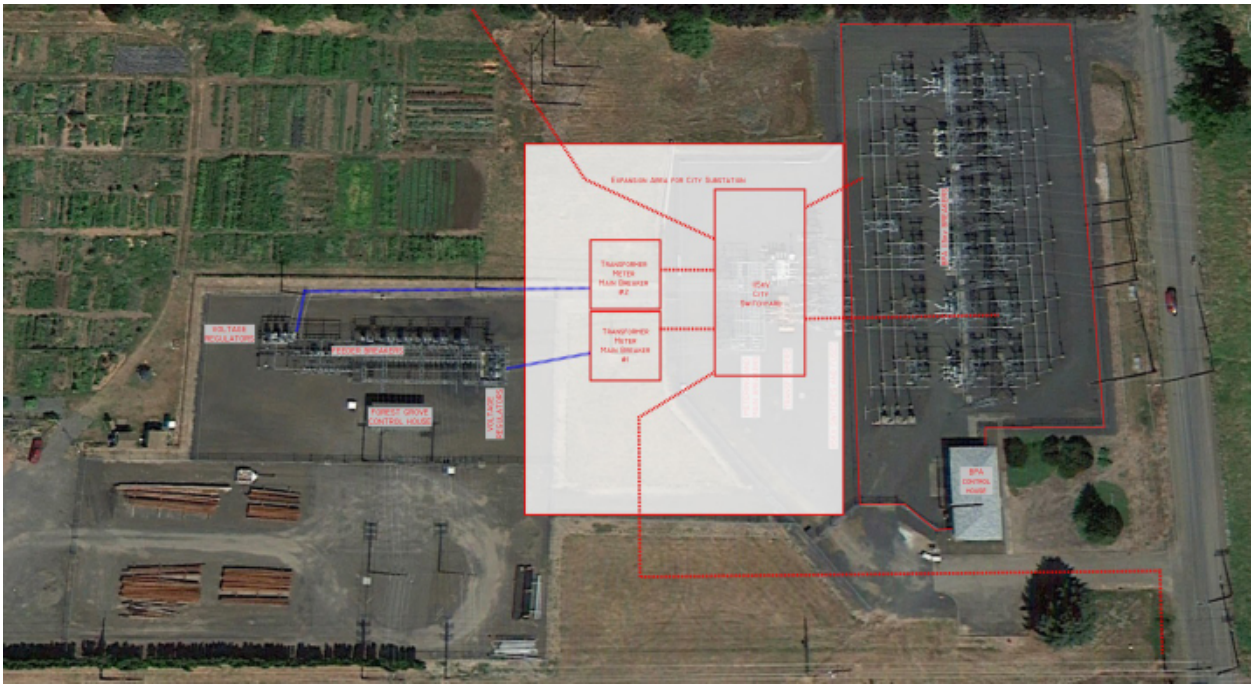

Forest Grove Substation - Expanded

Preliminary cost estimates for the 115kV switching station alone (not including replacement and relocation of transformers) was in excess of $2,000,000. The 115kV transmission line is estimated to cost about $700,000 per mile; the line to the Thatcher Junction tap would cost about $1,300,000, the line to the Filbert Substation tap would cost about $600,000.

Other Outage Reduction Options

During review of the BPA 115kV system it was recognized that other options may exist that can reduce the exposure to outages at the Filbert and Thatcher Junction Substations without requiring the construction of 115kV lines and the 115kV switchyard.

BPA 115kV Line Breaker/Switcher on Tillamook Line

Where the existing BPA 115kV B818 automatic switch is located on the Forest Grove – Tillamook line, upgrading this to a circuit breaker with associated protective relaying would allow this device to clear faults toward Tillamook without interrupting service to Thatcher Junction Substation. This would require development of a fenced substation at the site.

Alternately, either of the automatic switches, B818 (Thatcher tap) or B1043 (Timber tap), could be upgraded to a remotely-controlled circuit switcher with the protective relaying

located at the existing BPA Forest Grove Substation with control of the circuit switcher provided by fiber optic communication line. The circuit switcher could be located at the Thatcher Junction tap or at the Timber Substation tap. Either would isolate Thatcher Junction Substation from the majority (~80%) of the line exposure.

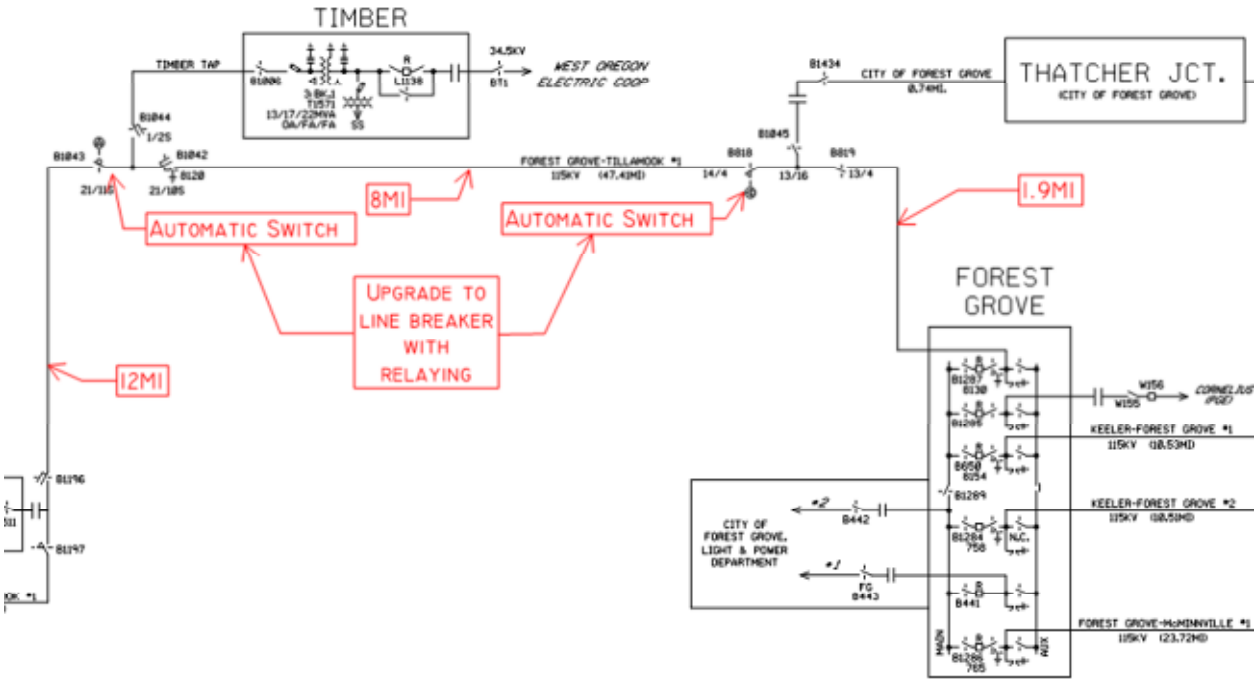

Option to Reduce Outages to Thatcher Substation

Conceptually, protective relaying at Forest Grove Substation would monitor the line for faults; if a remote fault is detected, the line switch would be used to interrupt the fault; if the fault is closer to Forest Grove Substation, the circuit breaker at Forest grove would operate. However, given the significantly lower exposure to faults between the Thatcher tap and Forest Grove Substation, the number of interruptions to the Thatcher Substation could be greatly reduced.

It is recommended that BPA be approached toward upgrading the protection on the Forest Grove – Tillamook line. Based on typical equipment costs and BPA engineering, it is recommended that $500,000 be allocated for upgrading the protection on this line. This is significantly less than the costs for Forest Grove to build its own 115kV system.

<u>Add Automatic Switch at Filbert Tap</u>

Because the Filbert Substation is located on a ~19 mile section of line, even though it is less than 1 mile from Forest Grove Substation, it is affected by outages along the entire line. The addition of a new BPA automatic switch at B397 would improve restoration of

Filbert Substation for BPA 115kV line faults between Forest Grove and Carlton Substations. Anecdotal evidence indicates that outages along this line are infrequent.

Similar to the recommendation for the line toward Tillamook, the installation of a circuit switcher in the line, controlled by relaying located at BPA Forest Grove Substation, is recommended. A similar allocation of funds is recommended.

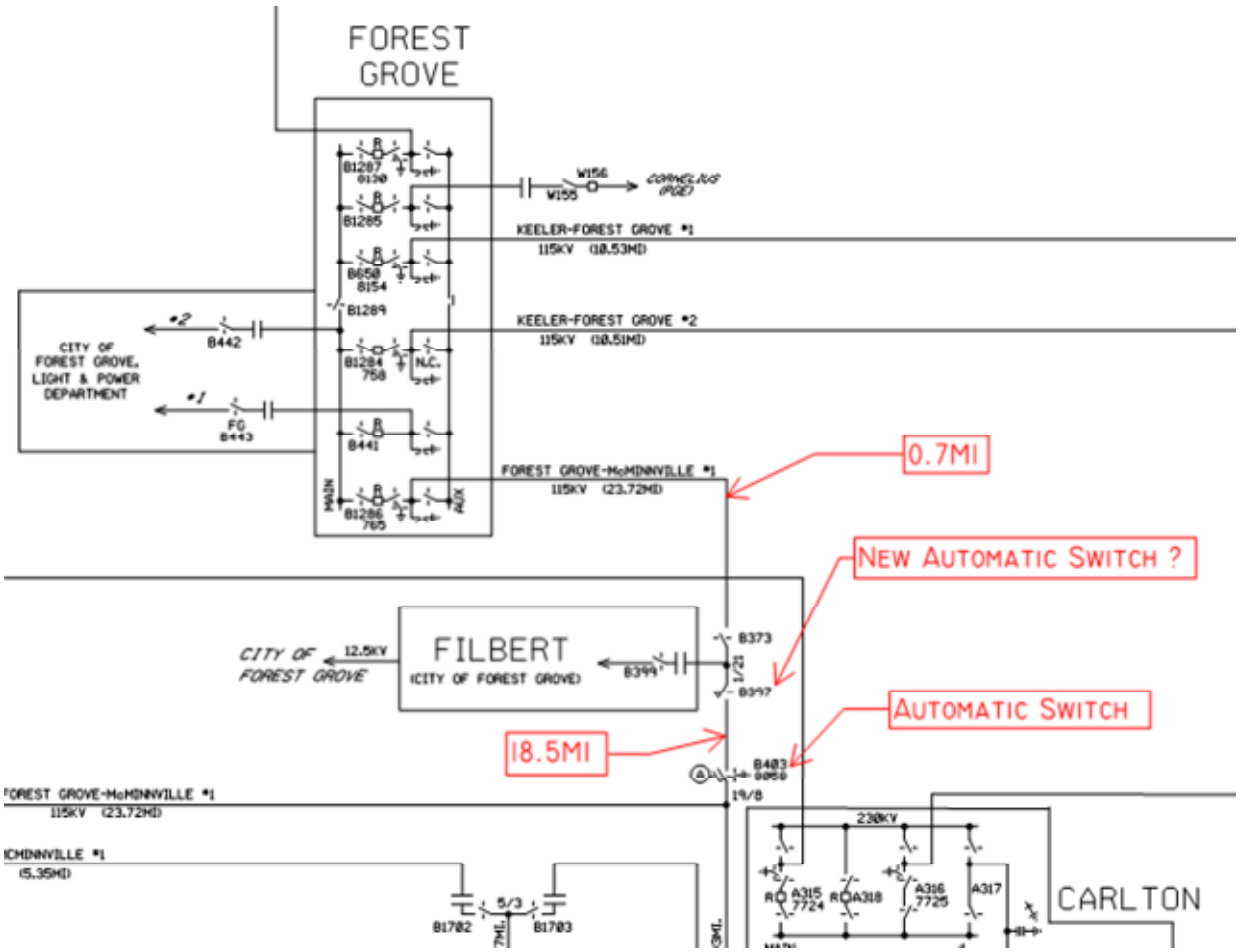

Option to Reduce Outages to Thatcher Substation

<u>Rebuilding 12.5kV Breaker Bays</u>

It is reasonable to assume that the 12.5kV bus, switches, and related equipment are of similar vintage as the feeder breakers. In general, bus and manual switches have a long life and do not require replacement as frequently as transformers, voltage regulators and breakers. However, if the existing facilities were poorly conceived, poorly built, or poorly maintained, it may be appropriate to rebuild the 12.5kV facilities. Staff has not indicated that there are any significant issues with the existing facilities. Insufficient

data is available at this time to evaluate the condition of the 12.5kV facilities and their replacement is not recommended.

Forest Grove 115kV Switch

As part of the overall transmission system review, the Forest Grove Substation work considered replacement of structures and the addition of bus and switches to facilitate alternate feeds to transformers. As currently connected to the BPA system, one of the Forest Grove transformers must be taken out of service whenever BPA needs to perform maintenance on some of their facility.

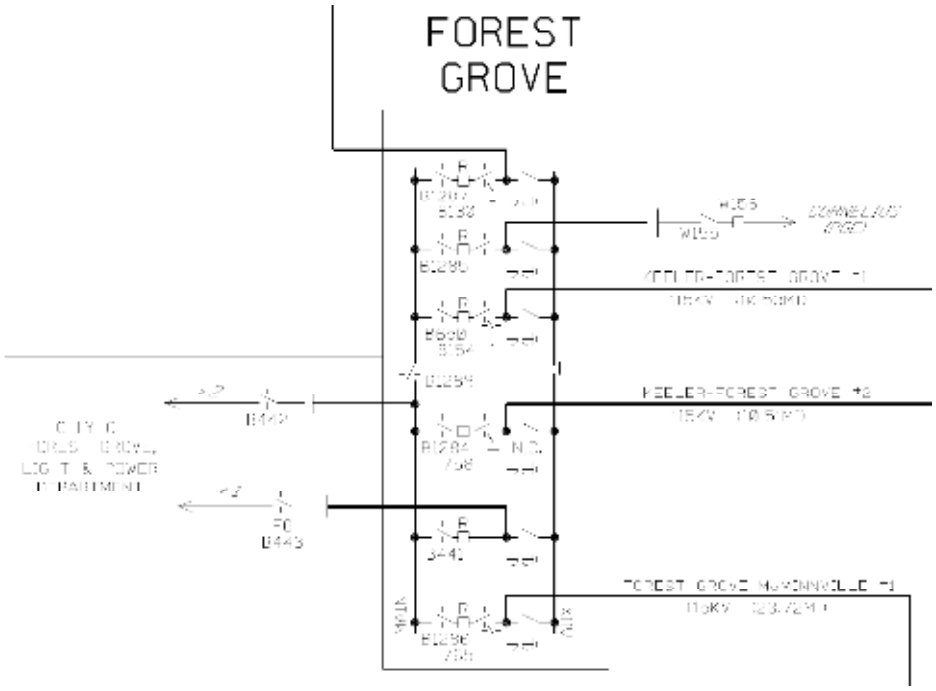

Existing BPA Forest Grove

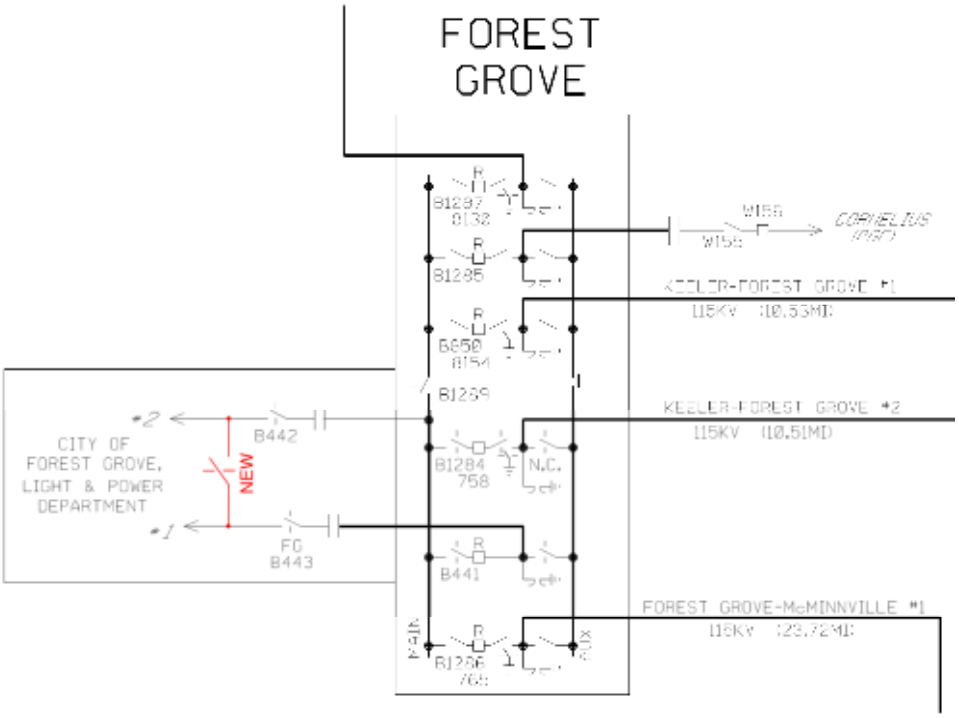

Added Switch at Forest Grove

This new switch would allow the City to maintain service to both Forest Grove transformers when BPA needs to perform maintenance on their facilities. However, both of the existing steel switch/fuse structures will need to be replaced to accommodate this change. This addition will be further considered as part of a broader 115kV transmission loop study.

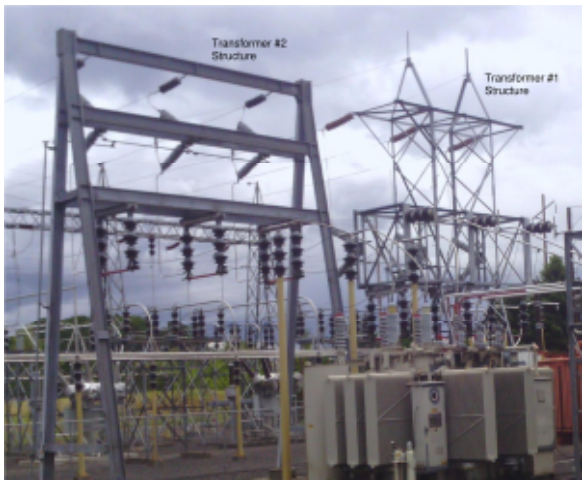

Forest Grove Substation Transformer Switch/Fuse Structures

Cost Estimate

Cost estimates for the options considered and recommended were developed following typical utility cost estimating practices. The cost estimate for each item includes purchase of that item, installation, foundations (where needed), testing and commissioning.

Feeder breaker replacement includes replacement of protective relays with new microprocessor-based relays with enhanced communication to facilitate future remote monitoring.

The scheduling of the projects is based on a detailed review by Utility staff; their proposed schedule was incorporated into the plan.

The following page is a tabulated summary of the proposed master plan schedule and costs.

Project	Tasks	2013-2014	2014-2015	2015-2016	2016-2017	2017-2018	Total
Thatcher Junction Substation power transformer (1959)	Engineering/design	50k	30k				1,020k
	Purchase and install transformer	600k	50k				
	Purchase and install control house	30k	20k				
	Purchase and install circuit switcher	100k	20k				
	Purchase and install transformer relays	20k	20k				
	Purchase and install feeder protective relays	40k	40k				
Forest Grove Substation transformer #2 (1968)	Engineering/design	20k	50k	30k			1,175k
	Purchase and install transformer		600k	50k			
	Purchase and install control house		30k	20k			
	Purchase and install circuit switcher		100k	20k			
	Purchase and install transformer relays		20k	20k			
	Purchase and install feeder bypass breaker		25k	10k			
	Purchase and install replacement breakers (3)		60k	20k			
	Purchase and install feeder protective relays		50k	50k			
Forest Grove Substation transformer #1 (1975)	Engineering/design	30k	50k	10k	30k		1,090k
	Purchase and install transformer		600k		50k		
	Purchase and install circuit switcher		100k		20k		
	Purchase and install transformer relays		20k		20k		
	Purchase and install feeder bypass breaker		25k		10k		
	Purchase and install replacement breakers (1)		20k		5k		
	Purchase and install feeder protective relays		50k		50k		
Filbert Substation	Engineering/Design				30k	20k	380k
	Purchase and install circuit switcher					120k	
	Purchase and install transformer relays					40k	
	Purchase and install feeder bypass breaker	35k					
	Install voltage regulators					30k	
	Purchase and install feeder protective relays	75k				30k	
Replace aged main and feeder breakers	Program to replace one breaker each 2 years					30k	30k
Upgrade 115kV line switching with circuit breakers to reduce impact of line outages, concept design for 115kV loop	Engineering/design	50k	50k				600k
	Allocation for construction by BPA*		500k*				
Annual Cost Summary		1,050k	2,530k	230k	215k	270k	4,295k

*BPA construction and engineering costs do not consider the possibility of cost sharing.
All costs estimated and in current dollars.