POWER DEVICES

- DUPLEX RECEPTACLE [+ 18"]
- HALF-SWITCH RECEPTACLE [+ 18"]
- ISOLATED RECEPTACLE [+ 18"]
- DUPLEX RECEPTACLE [ABOVE COUNTER]
- DOUBLE DUPLEX RECEPTACLE [+ 18"]
- DOUBLE DUPLEX RECEPTACLE [ABOVE COUNTER]
- SINGLE RECEPTACLE [+ 18"]
- DUPLEX RECEPTACLE IN CEILING
- DOUBLE DUPLEX RECEPTACLE IN CEILING
- PEDESTAL MOUNTED DUPLEX RECEPTACLE
- FLUSH FLOOR BOX DUPLEX RECEPTACLE
- SPECIAL PURPOSE POWER RECEPTACLE [+ 18"]
- ELECTRICAL EQUIPMENT CONNECTION
- POWER/DATA POLE
- MAGNETIC STARTER
- SAFETY SWITCH
- FUSED SAFETY SWITCH
- ELECTRICAL MOTOR CONNECTION
- SINGLE-POINT ELECTRICAL CONNECTION
- PUSH BUTTON CONTROL [+ 45"]
- UP/DOWN/STOP PUSH BUTTON CONTROL [+ 45"]
- TRANSFORMER
- COMBINATION POWER/DATA/TELE FLUSH FLOOR BOX
- JUNCTION BOX
- J-BOX - W/ EMERGENCY CIRCUIT
- FLUSH AUTOMATIC DOOR ACTUATOR [+45"]
- CONTROL RELAY

DISTRIBUTION & EQUIPMENT

- FLUSH ELECTRICAL PANEL [MAX 6'-6" TO TOP]
- SURFACE ELECTRICAL PANEL [MAX 6'-6" TO TOP]
- FLUSH CONTROL PANEL [MAX 6'-6" TO TOP]
- SURFACE CONTROL PANEL [MAX 6'-6" TO TOP]
- U.G. VAULT
- METER BASE & SOCKET

REFERENCE SYMBOLS & WIRING

- CONDUIT WITH GROUND CONDUCTOR
- NEUTRAL CONDUCTOR
- PHASE CONDUCTOR
- HOMERUN ARROW
- PLAN NOTE MARK
- SHEET REFERENCE MARK
- MECHANICAL. EQUIPMENT NOTE MARK
- SHOP EQUIPMENT NOTE MARK
- KITCHEN EQUIPMENT NOTE MARK
- XXXXX FEEDER MARK
- [+ XX"] STANDARD MOUNTING HEIGHT UNLESS OTHERWISE NOTED ON DRAWINGS

LIGHTING DEVICES

- SURFACE MOUNTED LIGHT FIXTURE
- SURFACE MOUNTED EMERGENCY LIGHT FIXTURE
- SURFACE MOUNTED LIGHT FIXTURE
- SURFACE MOUNTED EMERGENCY LIGHT FIXTURE
- RECESSED FLUORESCENT LIGHT FIXTURE
- RECESSED EMERGENCY LIGHT FIXTURE
- RECESSED FLUORESCENT LIGHT FIXTURE
- RECESSED EMERGENCY LIGHT FIXTURE
- PENDANT LIGHT FIXTURE
- PENDANT EMERGENCY LIGHT FIXTURE
- TRACK LIGHTING SYSTEM
- STRIP LIGHT FIXTURE
- EMERGENCY STRIP LIGHT FIXTURE
- RECESSED DOWNLIGHT
- RECESSED EMERGENCY DOWNLIGHT
- WALL WASH FIXTURE
- WALL MOUNTED LIGHT FIXTURE
- WALL MOUNTED EMERGENCY LIGHT FIXTURE
- PENDANT MOUNTED LIGHT FIXTURE
- PENDANT MOUNTED EMERGENCY LIGHT FIXTURE
- SURFACE MOUNTED LIGHT FIXTURE
- SURFACE MOUNTED EMERGENCY LIGHT FIXTURE
- LINEAR WALL MOUNTED LIGHT FIXTURE
- LINEAR WALL MOUNTED EMERGENCY FIXTURE
- FLOOD LIGHT FIXTURE
- POLE ARM MOUNT LIGHT FIXTURE
- LIGHTED BOLLARD
- EMERGENCY LIGHTED BOLLARD
- POLE TOP MOUNT LIGHT FIXTURE
- BATTERY PACK EMERGENCY LIGHT FIXTURE
- REMOTE EMERGENCY BATTERY BALLAST
- STEP LIGHT
- CEILING MOUNTED EXIT SIGN (SIGN FACE)
- WALL MOUNTED EXIT SIGN [+ 18" ABOVE DOOR]
- COMBO EXIT SIGN/ EMERGENCY LIGHT [+ 18" ABOVE DOOR]
- $ SINGLE-POLE SWITCH [+ 45"]
- $2 TWO-POLE SWITCH [+ 45"]
- $3 THREE-WAY SWITCH [+ 45"]
- $4 FOUR-WAY SWITCH [+ 45"]
- $K SINGLE POLE-KEY SWITCH [+ 45"]
- $S SWEEP SWITCH [+ 45"]
- $S3 SWEEP SWITCH - 3 WAY [+ 45"]
- $LV LOW VOLTAGE SWITCH [+ 45"]
- $M MOMENTARY LOW VOLTAGE SWITCH [+ 45"]
- $MK KEYED MOMENTARY LOW VOLTAGE SWITCH [+ 45"]
- $D DIMMER SWITCH [+ 45"]
- $O OCCUPANCY SENSOR SWITCH [+ 45"]
- $P SINGLE-POLE SW. W/PILOT LIGHT [+ 45"]
- LIGHTING RELAY
- OCCUPANCY SENSOR ONE WAY CEILING MOUNT
- OCCUPANCY SENSOR TWO WAY CEILING MOUNT
- OCCUPANCY SENSOR 360° CEILING MOUNT
- OCCUPANCY SENSOR WALL MOUNT
- OCCUPANCY SENSOR POWER PACK
- PHOTOCELL
- AUTO-TRANSFORMER DIMMER
- BALLAST LOAD TRANSFER EMERGENCY RELAY
- LIGHTING CONTACTOR

TELECOMMUNICATION DEVICES

- DATA OUTLET [+ 18"]
- DATA OUTLET [ABOVE COUNTER]
- DATA OUTLET ON CEILING.
- TELEPHONE OUTLET [+ 18"]
- TELEPHONE OUTLET [ABOVE COUNTER]
- COMBO. TELE/DATA OUTLET [+ 18"]
- COMBO. TELE/DATA OUTLET [ABOVE COUNTER]
- FLUSH FLOOR BOX DATA OUTLET
- DATA OUTLET FOR WIRELESS NODE
- SPECIAL DATA OUTLET [+ 18"]
- PEDESTAL MOUNTED DATA OUTLET

SIGNAL DEVICES

- VOLUME CONTROL [+ 45"]
- AUDIO/VISUAL OUTLET [+ 18"]
- VIDEO OUTLET [+ 18"]
- MICROPHONE OUTLET [+ 18"]
- CLOCK [+96]
- TIME CLOCK (TIME SWITCH)
- CLOCK/SPEAKER WALL UNIT
- SPEAKER-CEILING MOUNTED
- SPEAKER-WALL MOUNTED [+84]
- THERMOSTAT [+45]
- THEATRICAL LIGHTING DMX CONTROL OUTLET
- BUZZER

FIRE ALARM DEVICES

- FIRE ALARM HORN/STROBE [+ 88"]
- FIRE ALARM PULL STATION [+ 45"]
- INTERCOM HORN [+ 88"]
- FIRE ALARM STROBE [+ 88"]
- HEAT DETECTOR
- MAGNETIC DOOR HOLDER
- CONTROL MODULE
- ALARM MODULE
- DUCT SMOKE DETECTOR
- PHOTO ELECTRIC TYPE SMOKE DETECTOR
- IONIZATION TYPE SMOKE DETECTOR
- FIRE/SMOKE DAMPER
- FIRE DOOR RELEASE
- BEAM DETECTOR TRANSMITTER
- BEAM DETECTOR RECEIVER
- SPRINKLER FLOW SWITCH
- SPRINKLER TAMPER SWITCH
- BELL
- KNOX BOX
- 120V IONIZATION TYPE SMOKE DETECTOR W/ INTEGRAL HORN/STROBE
- 120V PHOTO ELECTRIC TYPE SMOKE DETECTOR W/ INTEGRAL HORN/STROBE

SECURITY DEVICES

- BREAK GLASS DETECTOR
- SECURITY MOTION SENSOR
- FOUR WAY SECURITY MOTION SENSOR
- SECURITY CAMERA
- INFRARED DOOR ACCESS [ABOVE DOOR]
- SECURITY KEYPAD [+ 45"]
- MAGNETIC DOOR SWITCH
- ELECTRIC STRIKE
- PANIC DEVICE ELECTRIC LATCH HOLD OPEN
- MAGNETIC DOOR LOCK
- CENTRONIC DOOR CLOSER
- CARD READER [+ 45"]
- REX REQUEST TO EXIT DEVICE

ABBREVIATIONS

(E)	EXISTING TO REMAIN
(F)	FUTURE
(R)	EXISTING TO BE RELOCATED
(D)	EXISTING TO BE DEMOLISHED
AB	ABOVE COUNTER BACKSPLASH
AC	ALTERNATING CURRENT
A, AMP	AMPERES
AFF	ABOVE FINISHED FLOOR
AFG	ABOVE FINISHED GRADE
AFI	ARC-FAULT CIRCUIT INTERRUPTER
AHJ	AUTHORITY HAVING JURISDICTION
AIC	EQUIPMENT SHORT CIRCUIT INTERRUPT RATING.
AL	ALUMINUM
ALC	AUTOMATIC LIGHTING CONTROL
ATS	AUTOMATIC TRANSFER SWITCH
AUX	AUXILIARY
AWG	AMERICAN WIRE GAUGE
C	CONDUIT
CB	CIRCUIT BREAKER
CKT	CIRCUIT
CLG	CEILING
CT	CURRENT TRANSFORMER
CU	COPPER
DC	DIRECT CURRENT
DISC	DISCONNECT
DIA	DIAMETER
DIV	DIVISION
DP	DISTRIBUTION PANEL
DWG	DRAWING
EF	EXHAUST FAN
EMT	ELECTRICAL METALLIC TUBING
ENCL	ENCLOSURE
FA	FIRE ALARM
FAA	FIRE ALARM ANNUNCIATOR
FBO	FURNISHED BY OTHERS
FC	FOOT CANDLES
FLA	FULL LOAD AMPERES
FSD	FIRE/SMOKE DAMPER
GEN	GENERATOR
GFI	GROUND FAULT CIRCUIT INTERRUPTER
GND	GROUND
HP	HORSEPOWER
HTR	HEATER
IG	ISOLATED GROUND
KCMIL	THOUSAND CIRCULAR MILS
KW	KILOWATTS
KVA	KILOVOLT-AMPERES
LTG	LIGHTING
LCP	LIGHTING CONTROL PANEL
MAX	MAXIMUM
MB	MAIN BREAKER
MCA	MINIMUM CIRCUIT AMPERES
MDP	MAIN DISTRIBUTION PANEL
MFR	MANUFACTURER
MIN	MINIMUM
MISC	MISCELLANEOUS
MLO	MAIN LUGS ONLY
MSP	MAIN SERVICE PANEL
MTD	MOUNTED
NEC	NATIONAL ELECTRICAL CODE
NEMA	NATIONAL ELECTRICAL MFGR'S ASSOCIATION.
NL	NIGHT LIGHT
NTS	NOT TO SCALE
OFCI	OWNER FURNISHED, CONTRACTOR INSTALLED
OFOI	OWNER FURNISHED, OWNER INSTALLED
OS	OCCUPANCY SENSOR
PH, ø	PHASE
PNL	PANEL
SDP	SUB DISTRIBUTION PANEL
SWBD	SWITCHBOARD
SWGR	SWITCHGEAR
TB	TERMINAL BOARD
TEL	TELEPHONE
TK	INSTALL TOE KICK
TYP	TYPICAL
UPS	UNINTERRUPTIBLE POWER SUPPLY
V	VOLTS
VA	VOLT-AMPERES
VFD	VARIABLE FREQUENCY DRIVE
VR	VANDAL RESISTANT
W	WATT
W/	WITH
W/O	WITHOUT
WG	WIRE GUARD
WP	WEATHERPROOF
XFMR	TRANSFORMER

NURSE CALL

- NURSE CALL CORRIDOR LIGHT CEILING MOUNTED
- NURSE CALL CORRIDOR LIGHT WALL MOUNTED
- NURSE CALL ANNUNCIATOR PANEL
- NURSE CALL EMERGENCY STATION (PULL CORD)
- NURSE CALL PATIENT STATION (TWO-WAY COMM)
- NURSE CALL DUTY STATION
- NURSE CALL MASTER STATION

LINETYPE LEGEND

- UNDER GROUND
- ABOVE GROUND, IN WALL, CEILING, ETC.
- NEW EQUIPMENT (TYPICAL)
- EXISTING EQUIPMENT (TYPICAL)
- DEMOLISHED EQUIPMENT (TYPICAL)

DRAWING INDEX

DWG	DESCRIPTION
E0.1	ELECTRICAL TITLE SHEET
E1.1	ENLARGED FLOOR PLAN POWER
ED2.1	DEMOLITION PLAN ELECTRICAL
E3.1	ENLARGED PLAN LIGHTING
E4.0	ONE-LINE DIAGRAM, SCHEDULES AND DETAILS.

BcJ|A
Brian C. Jackson Architect LLC
13545 NW Logie Trail Rd.
Hillsboro, OR 97124 P. 503.310.8707
brian@bcjarchitect.com

REGISTERED PROFESSIONAL ENGINEER
JULY 20, 1983
STEPHEN M. LOCKHART
EXPIRES 12-31-18

SENIOR CENTER KITCHEN REHABILITATION

PROJECT - CDBG #8209

FOR:
FOREST GROVE SENIOR CENTER

2037 DOUGLAS STREET
FOREST GROVE, OR 97116

ISSUE		
Mark	Description	Date

DATE	03-13-18
PROJECT NO.	
CAD DWG FILE	
DRAWN BY	
CHECKED BY	BCJ

© copyright Brian C. Jackson, Architect LLC 2012

SHEET TITLE

ELECTRICAL TITLE SHEET

SCALE: NOTED ON DRAWINGS

SHEET E0.1

6915 SW MACADAM AVE.
SUITE 200
PORTLAND, OREGON 97219
PHONE: 503.892.1188
FAX: 503.892.1190
CONTACT...HANK BARLEEN
engineering@mke-inc.com
MKE & ASSOCIATES, INC.
CONSULTING ENGINEERS
MECHANICAL AND ELECTRICAL SYSTEMS

PLOTTED: DANIEL DERHEIMER 2/27/2018 8:52 AM
X:\DWG\BJ\4681\4681E01

KITCHEN EQUIPMENT SCHEDULE

MARK	EQUIPMENT DESCRIPTION	H.P.	LOAD (VA)	VOLT	PHASE	C.	WIRE	CIRCUIT	PANEL	NOTES
E1	CONVENIENCE RECEPTACLE		1,440	120	1	1/2"	(2) #12		A1	1,4
E2	CLOTHES DRYER		5,000	120/240	1	3/4"	(4) #10		B	3
E3	CLOTHES WASHER		1,200	120	1	1/2"	(2) #12		B	3
E8	20 QUART MIXER	1/2		120	1	1/2"	(2) #12	31	A1	2
E9	ICE MACHINE		5.4A	120	1	1/2"	(2) #12	35	A1	
E10	FIRE PROTECTION		2A	120	1	1/2"	(2) #12	33	A1	
E11	REACH-IN REFRIGERATOR		9.1A	120	1	1/2"	(2) #12	5	A1	2
E15	CONVECTION OVENS (STACK)		25KW	120/240	1	1-1/4"	(3) #1		MDP	5
E16	CONVECTION STEAMER		44.7A	240	1	1"	(3) #6	1,3	A2	5
E17	36" GRIDDLE		.5A	120	1	1/2"	(2) #12	5	A2	2,5
E18	OPEN BURNER RANGE		5A	120	1	1/2"	(2) #12	7	A2	2,5
E19	HOOD LIGHTS		245	120	1	1/2"	(2) #12		A1	4
E20	WARE WASHER (TANK)	2		240	1	1/2"	(3) #12	9.11	A2	
E22	WARE WASHER DETERGENT		1,440	120	1	1/2"	(2) #12	17	A2	1
E24	DROP-IN HOT WELLS		4,960	240	1	3/4"	(3) #10	10,12	A1	
E25	MICROWAVE		13	120	1	1/2"	(2) #12	7	A1	2
E26	COFEE BREWER		29A	240	1	3/4"	(3) #8	13,15	A1	

NOTES:
1. DEDICATED 120V, 20A CIRCUIT
2. PROVIDE NEMA 5-15R RECEPTACLE
3. EXISTING EQUIPMENT. CONFIRM WITH EXISTING CONDITIONS CONNECT TO EXISTING BREAKER.
4. SEE ELECTRICAL DRAWINGS.
5. PROVIDE SHUNT TRIP BREAKERS

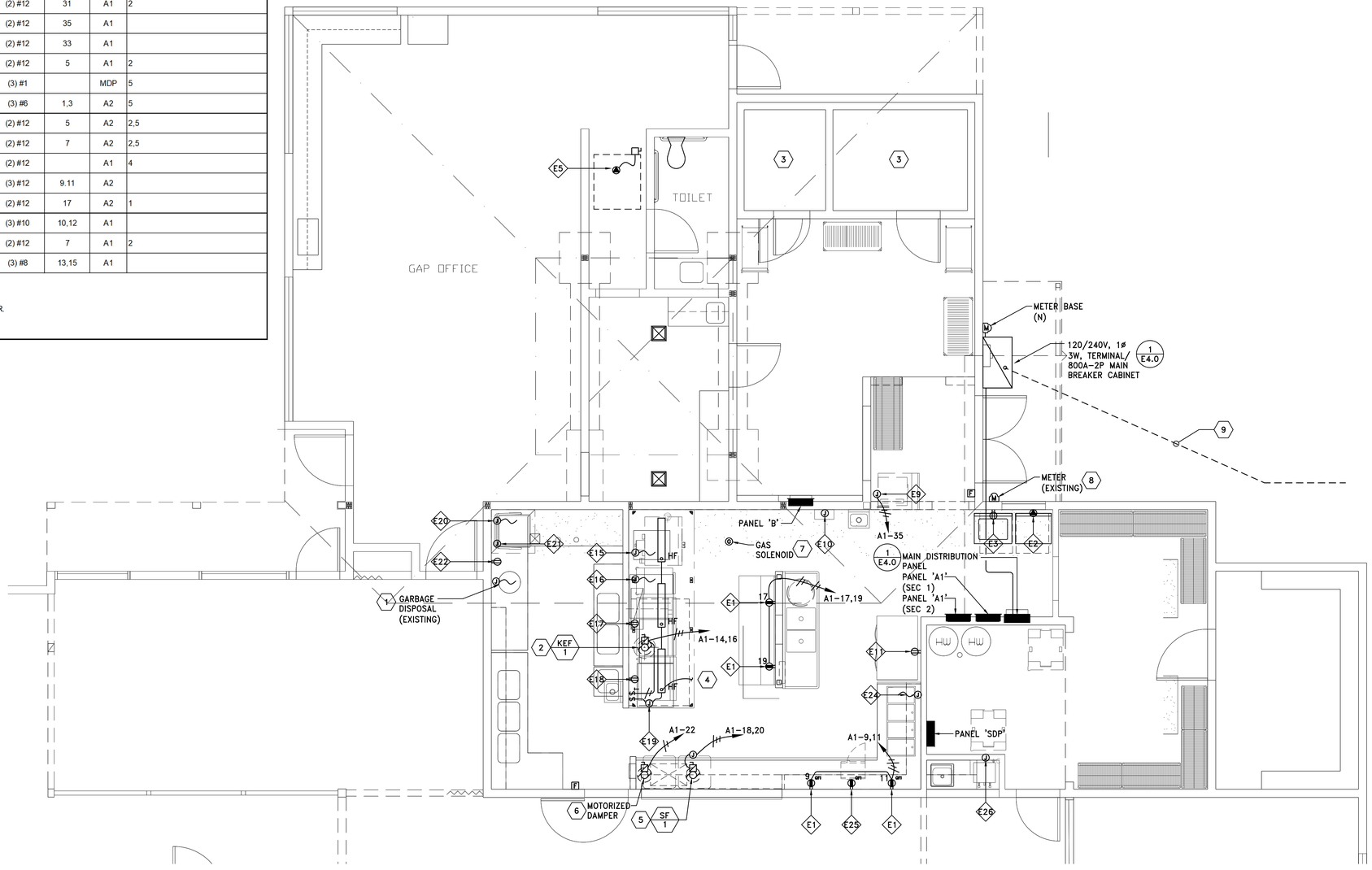

1 E1.1 ENLARGED FLOOR PLAN – POWER
SCALE: 1/4" = 1'-0"
0 2' 4' 8'

KEYED NOTES:

1. MAINTAIN FEEDER TO GARBAGE DISPOSAL. NEW GARBAGE DISPOSAL PROVIDED BY OWNER. DISCONNECT AND CONNECT NEW EQUIPMENT. CONFIRM ELECTRICAL REQUIREMENTS OF NEW DISPOSAL.
2. KITCHEN EXHAUST FAN 1-1/2HP, 240V, 1ø. PROVIDE (3) #12 IN 1/2" EMT TO 20A-2P BREAKER. PROVIDE INTERLOCK FOR KEF-1, SF-1, AND MOTORIZED DAMPER TO OPERATE AS ONE UNIT.
3. MAINTAIN CIRCUITS TO EXISTING COOLER/FREEZER.
4. CONNECT TO KITCHEN LIGHTING CIRCUIT.
5. SUPPLY FAN, 240V, 1ø, 1-1/2HP, 120V INTERLOCK W/KEF-1 AND MOTORIZED DAMPER.
6. MOTORIZED DAMPER, 1/10HP, 120V, INTERLOCK W/ KEF-1 AND SF-1.
7. PROVIDE 120V, 20A, CONNECTION TO GAS SOLENOID, CONTROL VIA FIRE ALARM CONNECTION/SHUTDOWN.
8. EXISTING METER BASE TO BE REMOVED.
9. PROVIDED AND INSTALL (2) 4" PVC SCHEDULE 40 CONDUITS BETWEEN TERMINAL COMPARTMENT AND VAULT UNDER FOREST GROVE POWER AND LIGHT TRANSFORMER VAULT. COORDINATION WITH UTILITY REQUIRED PRIOR TO CONDUIT INSTALLATION CONFIRM JOBSITE CONDITIONS TO PROVIDE TRENCH, BACKFILL, AND PAVEMENT PATCHING.

6915 SW MACADAM AVE.
SUITE 200
PORTLAND, OREGON 97219
PHONE: 503.892.1188
FAX: 503.892.1190
CONTACT...HANK BARLEEN
engineering@mke-inc.com
MKE & ASSOCIATES, INC.
CONSULTING ENGINEERS
MECHANICAL AND ELECTRICAL SYSTEMS

BcJ A
Brian C. Jackson Architect LLC
13545 NW Logie Trail Rd.
Hillsboro, OR 97124 P. 503.310.8707
brian@bcjarchitect.com

REGISTERED PROFESSIONAL ENGINEER
JULY 20, 1983
STEPHEN M. LOCKHART
EXPIRES 12-31-18

SENIOR CENTER KITCHEN REHABILITATION

PROJECT - CDBG #8209

FOR:
FOREST GROVE SENIOR CENTER

2037 DOUGLAS STREET
FOREST GROVE, OR 97116

ISSUE		
Mark	Description	Date

DATE	03-13-18
PROJECT NO.	
CAD DWG FILE	
DRAWN BY	
CHECKED BY	BCJ

© copyright Brian C. Jackson, Architect LLC 2012

SHEET TITLE

ENLARGED FLOOR PLAN POWER

SCALE: NOTED ON DRAWINGS

SHEET E1.1

PLOTTED: DANIEL DERHEIMER 3/12/2018 9:30 AM
X:\DWG\BJ\4681\4681E11

DEMO NOTES:

1. CONTRACTOR SHALL VISIT SITE AND BECOME THOROUGHLY FAMILIAR WITH THE EXISTING CONDITIONS PRIOR TO BIDDING.
2. ALL LABOR AND MATERIALS REQUIRED TO CHANGE THE EXISTING ELECTRICAL INSTALLATION AS INDICATED SHALL BE PROVIDED. DRAWINGS ARE DIAGRAMMATIC AND DO NOT SHOW ALL EXISTING INTERCONNECTING COMPONENTS.
3. OWNER SHALL HAVE FIRST RIGHT OF SALVAGE OF ANY AND ALL ELECTRICAL MATERIALS AND EQUIPMENT INTENDED FOR DEMOLITION. ITEMS NOT SALVAGED BY THE OWNER SHALL BECOME THE PROPERTY OF THE CONTRACTOR AND SHALL BE REMOVED FROM THE SITE.
4. CONTRACTOR SHALL PROVIDE ALL NECESSARY LABOR AND MATERIALS TO MAINTAIN TEMPORARY ELECTRICAL SYSTEMS AS MAY BE REQUIRED BY OWNER IN OPERATION DURING THE CONSTRUCTION PERIOD.
5. ALL EXISTING ELECTRICAL SYSTEMS INCLUDING LIGHT FIXTURES, CONDUIT, AND WIRING WHICH ARE NOT TO BE DEMOLISHED SHALL BE PROTECTED FROM DAMAGE DURING THE DEMOLITION AND CONSTRUCTION PHASES.
6. ALL ABANDONED WIRING SHALL BE REMOVED COMPLETELY BACK TO THE SOURCE: EXISTING CONDUIT MAY BE REUSED IF PRACTICAL, CAPPING OFF CONDUIT STUBS THAT MAY REMAIN. CONDUIT PENETRATING WALLS AND FLOORS WHICH ARE TO REMAIN SHALL BE CUT OFF FLUSH. SEAL ALL ABANDONED CONDUIT.
7. INFORMATION GIVEN ON THE DRAWINGS IN REFERENCE TO EXISTING FEATURES HAS BEEN OBTAINED FROM OWNER'S RECORDS AND RECENT OBSERVATION, BUT CANNOT BE GUARANTEED TO BE COMPLETELY ACCURATE IN ALL RESPECTS. VERIFY ALL INFORMATION BEFORE PROCEEDING WITH ANY WORK.
8. UNLESS OTHERWISE NOTED, RECONNECT EXISTING BRANCH CIRCUITING TO NEW LUMINAIRES.
9. WHERE LUMINAIRES ARE SHOWN TO BE REMOVED, EXTEND EXISTING CIRCUIT TO ADJACENT LUMINAIRE TO MAINTAIN CONTROL AND CIRCUITRY.

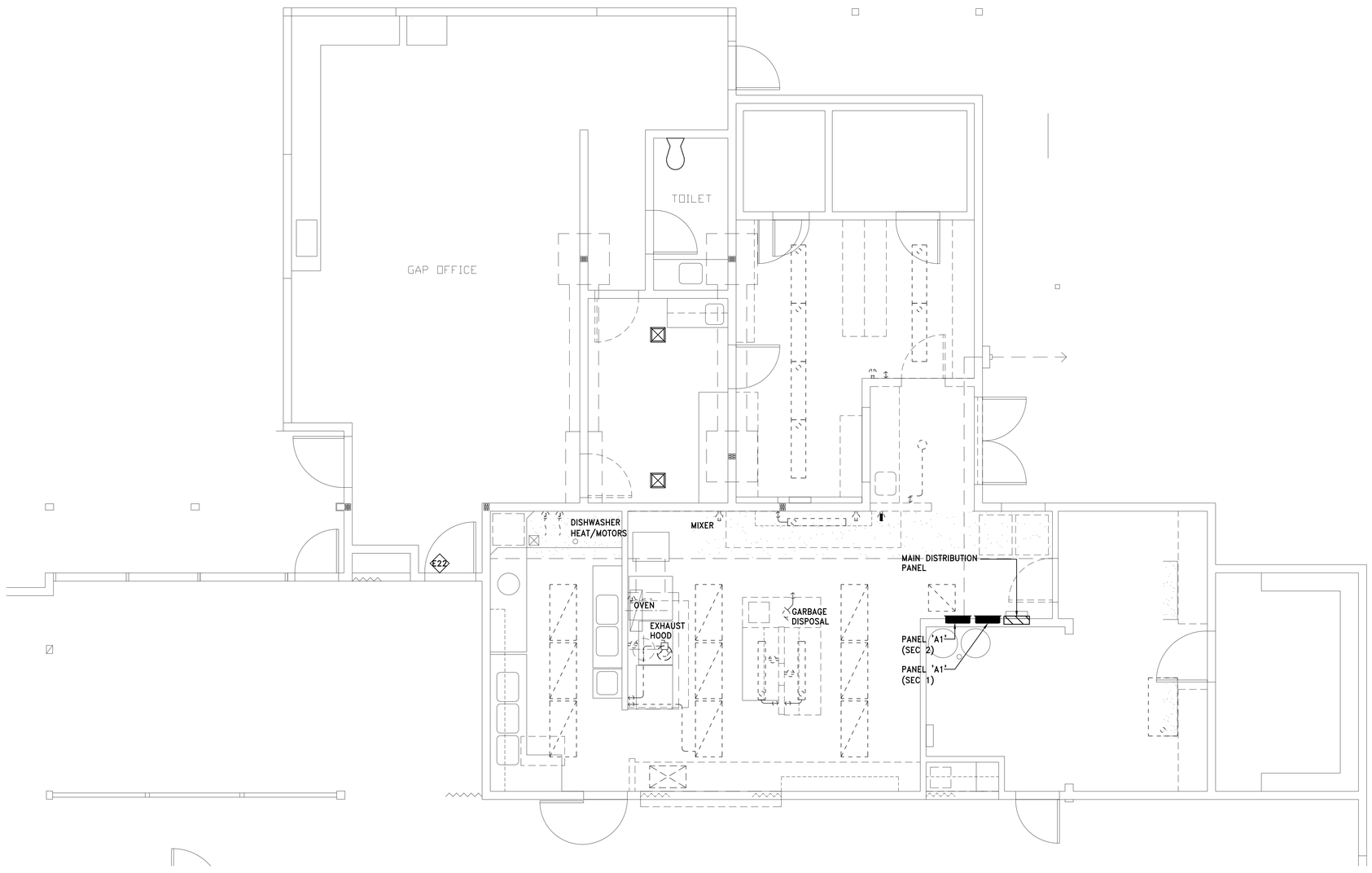

1 / ED2.1 DEMOLITION PLAN – ELECTRICAL
SCALE: 1/4" = 1'-0"
0 2' 4' 8'

BcJ|A
Brian C. Jackson | Architect LLC
13545 NW Logie Trail Rd.
Hillsboro, OR 97124 P. 503.310.8707
brian@bcjarchitect.com

REGISTERED PROFESSIONAL ENGINEER
JULY 20, 1983
STEPHEN M. LOCKHART
EXPIRES 12-31-18

SENIOR CENTER KITCHEN REHABILITATION

PROJECT - CDBG #8209

FOR:
FOREST GROVE SENIOR CENTER

2037 DOUGLAS STREET
FOREST GROVE, OR 97116

ISSUE		
Mark	Description	Date

DATE	03-13-18
PROJECT NO.	
CAD DWG FILE	
DRAWN BY	
CHECKED BY	BCJ

© copyright Brian C. Jackson, Architect LLC 2012

SHEET TITLE

DEMOLITION PLAN ELECTRICAL

SCALE: NOTED ON DRAWINGS

ED2.1
SHEET

6915 SW MACADAM AVE.
SUITE 200
PORTLAND, OREGON 97219
PHONE: 503.892.1188
FAX: 503.892.1190
CONTACT...HANK BARLEEN
engineering@mke-inc.com
MKE & ASSOCIATES, INC.
CONSULTING ENGINEERS
MECHANICAL AND ELECTRICAL SYSTEMS

PLOTTED: DANIEL DERHEIMER 3/7/2018 2:26 PM
X:\DWG\BJ\4681\4681E21

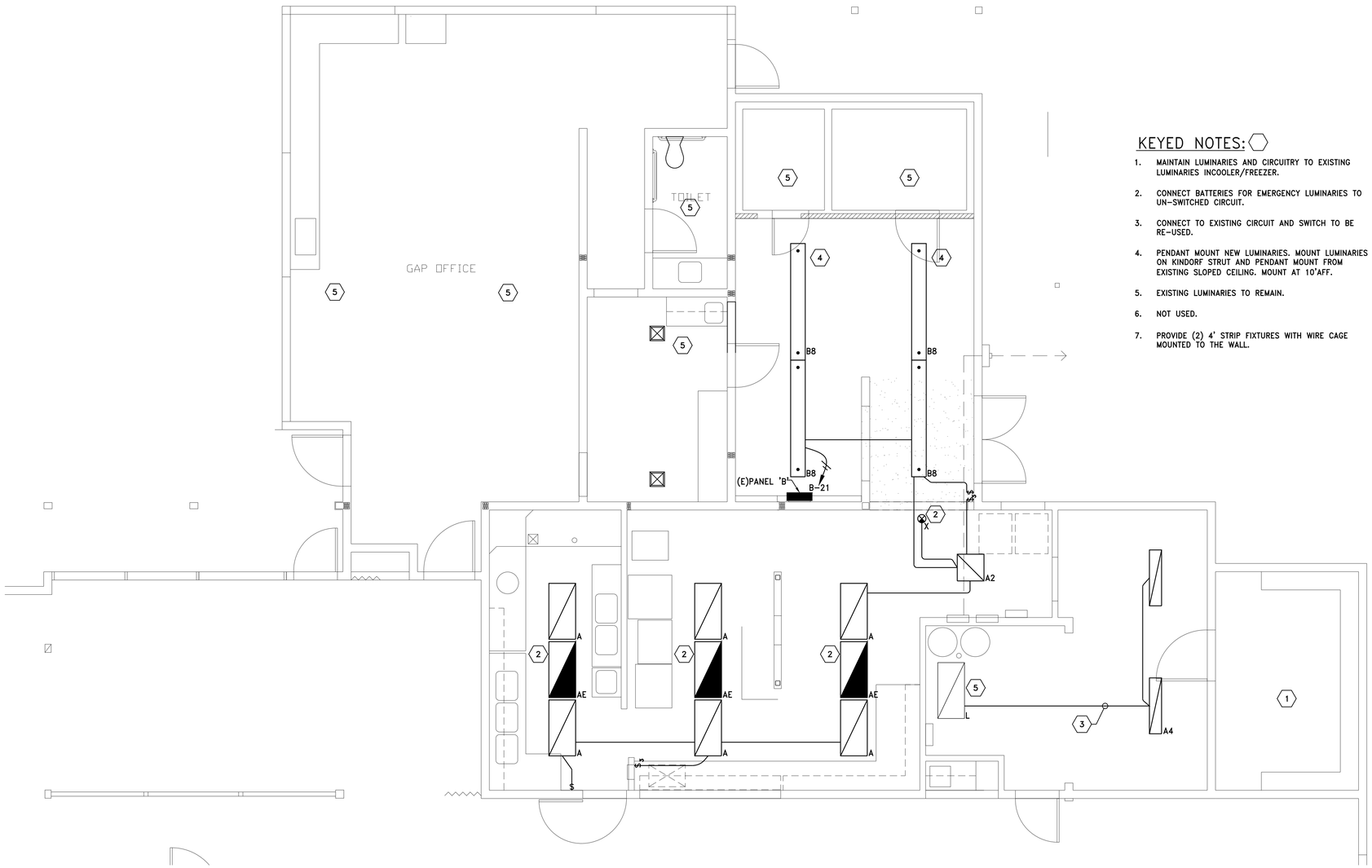

KEYED NOTES:

1. MAINTAIN LUMINARIES AND CIRCUITRY TO EXISTING LUMINARIES INCOOLER/FREEZER.
2. CONNECT BATTERIES FOR EMERGENCY LUMINARIES TO UN-SWITCHED CIRCUIT.
3. CONNECT TO EXISTING CIRCUIT AND SWITCH TO BE RE-USED.
4. PENDANT MOUNT NEW LUMINARIES. MOUNT LUMINARIES ON KINDORF STRUT AND PENDANT MOUNT FROM EXISTING SLOPED CEILING. MOUNT AT 10'AFF.
5. EXISTING LUMINARIES TO REMAIN.
6. NOT USED.
7. PROVIDE (2) 4' STRIP FIXTURES WITH WIRE CAGE MOUNTED TO THE WALL.

1 / E3.1 FLOOR PLAN – LIGHTING

SCALE: 1/4" = 1'-0"

0 2' 4' 8'

N

LUMINARIES SCHEDULE

TYPE	DESCRIPTION
A	2' X 4' RECESSED LED LUMINARY, 120V, 4000 LUMENS AT 32 WATTS, 3500K, ACRYLIC LENS, T-BAR MOUNTING. LITHONIA: 2SBSL4 OR EQUIVALENT.
AE	SAME AS TYPE 'A' EXCEPT PROVIDE LUMEN BATTERY BACKUP.
A2	SAME AS TYPE 'A' EXCEPT 2' X 2' WITH 2000 LUMEN OUTPUT.
A4	SAME AS TYPE 'A' EXCEPT 1' X 4', 2000 LUMEN, MOUNTED IN GYPBOARD CEILING.
B8	PENDANT MOUNT 96" LED LUMINARY, 6000 LUMENS, 3500K, SYMMETRICAL REFLECTOR, DROP LENS. LITHONIA: ZLID-L96-SMR-6000LM
X	UNIVERSAL MOUNT LED EXIT SIGN. HIGH IMPACT ACRYLIC, BATTERY BACKUP, 120V. LITHONIA: EXR LED M6.

6915 SW MACADAM AVE.
SUITE 200
PORTLAND, OREGON 97219
PHONE: 503.892.1188
FAX: 503.892.1190
CONTACT...HANK BARLEEN
engineering@mke-inc.com

MKE & ASSOCIATES, INC.
CONSULTING ENGINEERS
MECHANICAL AND ELECTRICAL SYSTEMS

BcJ|A
Brian C. Jackson | Architect LLC
13545 NW Logie Trail Rd.
Hillsboro, OR 97124 P. 503.310.8707
brian@bcjarchitect.com

REGISTERED PROFESSIONAL ENGINEER
JULY 20, 1993
STEPHEN M. LOCKHART
EXPIRES 12-31-18

SENIOR CENTER KITCHEN REHABILITATION

PROJECT - CDBG #8209

FOR:
FOREST GROVE SENIOR CENTER

2037 DOUGLAS STREET
FOREST GROVE, OR 97116

ISSUE		
Mark	Description	Date

DATE	03-13-18
PROJECT NO.	
CAD DWG FILE	
DRAWN BY	
CHECKED BY	BCJ

© copyright Brian C. Jackson, Architect LLC 2012

SHEET TITLE

FLOOR PLAN LIGHTING

SCALE: NOTED ON DRAWINGS

SHEET E3.1

PLOTTED: DANIEL DERHEIMER 3/7/2018 2:26 PM
X:\DWG\BJ\4681\4681E31

PANEL SCHEDULE

PANEL: PANEL A1 (SECTION #1) — MKE & ASSOCIATES, INC. — **MOUNTING:** FLUSH

FED BY: MDP — **BUS/MAIN:** 400A BUS PROVIDE FEED THRU LUGS

LOC: KITCHEN — **VOLTS** 120/240 — **PHASE** 1 — **WIRE** 3

C	DESCRIPTION	VA	A/P	No.	A	C	No.	A/P	VA	DESCRIPTION	C
4	DISHWASHER	4500	50/2	1	*		2	30/2	2250	WATER HEATER (2)	3
4	*	4500	*	3		*	4	*	2250	*	3
4	REFRIG - #11	1092	20/1	5	*		6	30/2	2250	WATER HEATER (2)	3
4	MICROWAVE - #25	1420	20/1	7		*	8	*	2250	*	3
4	R - KITCHEN	720	20/1	9	*		10	30/2	2480	HOT WELLS - #24	4
4	R - KITCHEN	720	20/1	11		*	12	*	2480	*	4
4	R - BREWER #26	3480	40/2	13	*		14	20/2	1200	KEF-1 (1)	6
4	*	3480	*	15		*	16	*	1200	*	6
4	R - KITCHEN	720	20/1	17	*		18	20/2	1200	SF-1 (1)	6
4	R - KITCHEN	720	20/1	19		*	20	*	1200	*	6
4	R - KITCHEN	720	20/1	21	*		22	20/1	100	DAMPER (1)	6
4	R - KITCHEN	720	20/1	23		*	24	20/1	800	L-EXISTING CIRCUITS (2)	1
	SPARE		20/1	25	*		26	20/1	720	*	1
	SPARE		20/1	27		*	28	20/1	720	*	1
	SPARE		20/1	29	*		30	20/1	1100	*	1
4	20 QT. MIXER #8	640	20/1	31		*	32	20/1	820	*	1
4	FIRE SUPPRESSION #10	240	20/1	33	*		34	20/1	1100	*	1
4	ICE MACHINE #9	1240	20/1	35		*	36	20/1	720	*	1
	EXISTING CIRCUITS (2)		20/1	37	*		38	20/1	900	*	1
	*		20/1	39		*	40	20/1	1120	*	1

LOAD CODE (VA)	PH A	PH B	TOTAL (VA)	FACTOR	CODE LOAD
1. LIGHTS:	3,820	4,180	8,000	1.25	10,000
2. RECEPTACLE:	0	0	0	*	0
3. HEATING:	4,500	4,500	9,000	1.00	9,000
4. KITCHEN:	13,952	15,920	29,872	0.65	19,417
5. EQUIPMENT:	0	0	0	1.00	0
6. MOTORS:	2,500	2,400	4,900	**	5,500
7. MISC.	0	0	0	1.00	0
TOTAL (VA):	24,772	27,000	51,772		43,917

LARGEST MOTOR: 1,200 VA — **TOTAL LOAD:** 216 A — **CODE DEMAND:** 183 A

KITCHEN EQUIPMENT 14

NOTES:
(1)SEE CONTROL DIAGRAM FOR INTERLOCK.
(2) EXISTING CIRCUITS TO BE RECONNECTED TO NEW PANEL.

* FIRST 10 KVA + 50% OF THE BALANCE

** 125% OF THE LARGEST MOTOR + THE BALANCE

PANEL SCHEDULE

PANEL: PANEL A2 (SECTION #2) — MKE & ASSOCIATES, INC. — **MOUNTING:** FLUSH

FED BY: MDP — **BUS/MAIN:** 400A MLO

LOC: KITCHEN — **VOLTS** 120/240 — **PHASE** 1 — **WIRE** 3

C	DESCRIPTION	VA	A/P	No.	A	C	No.	A/P	VA	DESCRIPTION	C
4	STEAMER - #16 (3)	5364	50/2	1	*		2	30/2	2250	WATER HEATER (2)	3
4	*	5364	*	3		*	4	*	2250	*	3
4	GRIDDLE - #17 (3)	600	20/1	5	*		6	20/2	1500	AC GIFT SHOP	6
4	BURNER RANGE - #18 (3)	600	20/1	7		*	8	*	1500	*	6
4	WAREWASH TANK - #20	1440	20/2	9	*		10	20/2	1000	BASEBOARD HTR	6
4	*	1440	*	11		*	12	*	1000	*	6
4	WAREWASH BOOSTER - #21	4250	50/2	13	*		14	20/2	1000	BASEBOARD HTR	6
4	*	4250	*	15		*	16	*	1000	*	6
4	WAREWASH DET. - #22	1440	20/1	17	*		18	20/2	1000	BASEBOARD HTR	6
	SPARE		20/1	19		*	20	*	1000	*	6
	*		20/1	21	*		22	20/1	720	R- (2)	2
	*		20/1	23		*	24	20/1	540	R- (2)	2
	*		20/1	25	*		26	20/1	540	R- (2)	2
	*		20/1	27		*	28	20/1	720	FAN	6
	*		20/1	29	*		30	20/1	720	FAN	6
	*		20/1	31		*	32	20/1		SPARE	
	SPACE			33	*		34	20/1		*	
	*			35		*	36	20/1		*	
	*			37	*		38			SPACE	
	*			39		*	40			*	

LOAD CODE (VA)	PH A	PH B	TOTAL (VA)	FACTOR	CODE LOAD
1. LIGHTS:	0	0	0	1.25	0
2. RECEPTACLE:	1,260	540	1,800	*	1,800
3. HEATING:	2,250	2,250	4,500	1.00	4,500
4. KITCHEN:	13,094	11,654	24,748	0.65	16,086
5. EQUIPMENT:	0	0	0	1.00	0
6. MOTORS:	5,220	5,220	10,440	**	11,190
7. MISC.	0	0	0	1.00	0
TOTAL (VA):	21,824	19,664	41,488		33,576

LARGEST MOTOR: 1,500 VA — **TOTAL LOAD:** 173 A — **CODE DEMAND:** 140 A

KITCHEN EQUIPMENT 6

NOTES:
(1)SEE CONTROL DIAGRAM FOR INTERLOCK.
(2) EXISTING CIRCUITS TO BE RECONNECTED TO NEW PANEL.
(3) PROVIDE SHUNT TRIP BREAKERS

* FIRST 10 KVA + 50% OF THE BALANCE

** 125% OF THE LARGEST MOTOR + THE BALANCE

KEYED NOTES:

1. RE-TERMINATE CONDUCTORS IN NEW MAIN DISTRIBUTION PANEL.
2. PROVIDE NEW PANEL FEEDERS TO NEW PANEL.
3. MAINTAIN EXISTING PANELS AND FEEDERS. CONFIRM GROUND CONTINUITY BETWEEN PANEL AND MDP.
4. PROVIDE (2) 4" PVC CONDUITS FROM NEW TERMINAL COMPARTMENT TO EXISTING VAULT UNDER TRANSFORMER. TERMINATE CONDUIT AT VAULT AS DIRECTED BY FOREST GROVE POWER AND LIGHT.
5. SERVICE RATED EQUIPMENT IS ACCEPTABLE.

COPPER 3-WIRE FEEDER CONDUCTOR SCHEDULE

(THHN/THWN COPPER PHASE [& NEUTRAL*] CONDUCTOR ONLY)
(THHN/THWN COPPER GROUND CONDUCTOR)

TAG	CONDUIT	CONDUCTOR	EQUIPMENT GROUND
1003	1 1/4"	3 #2	#8
1253	1 1/2"	3 #1	#6
2003	2"	3 #3/0	#6
4003	3"	3 #500KCM	#3
8003	(2) 3" EACH W/	3 #500KCM	#1/0

* NOTE: WHERE FEEDER TYPE IS USED ON A SINGLE PHASE FEEDER THE CONDUCTOR SHOWN IS TWO PHASE CONDUCTORS AND FULL SIZE NEUTRAL CONDUCTOR

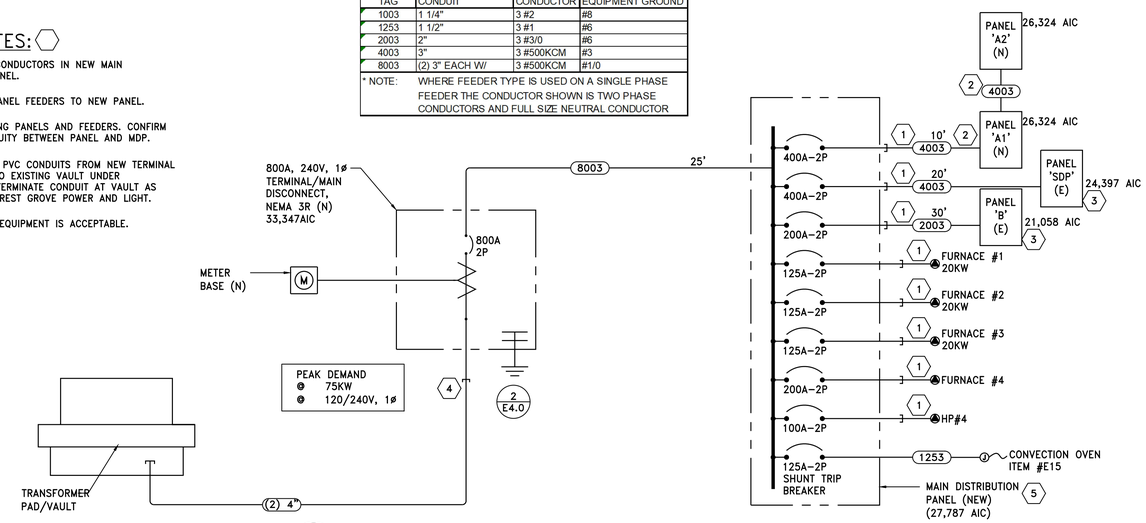

1 / E4.0 ONE-LINE POWER DISTRIBUTION DIAGRAM
120/240V, 1ø, 3W

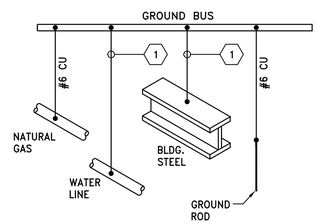

GENERAL NOTES:

1. SIZE CONDUCTORS PER NEC 250.
2. CONDUCTORS TO BE COPPER.

KEYED NOTES:

1. SIZE THE GROUNDING ELECTRODE CONDUCTOR PER SERVICE SIZE AS FOLLOWS: 400 AMP = #2 CU., 600 AMP = #1/0 CU., 800 & 1,000 AMP = #2/0 CU., ALL SERVICES 1,200 AMPS AND LARGER = #3/0 CU.

2 / E4.0 GROUNDING DETAIL
SCALE: N.T.S.

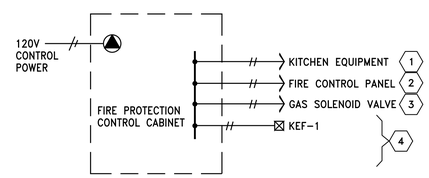

KEYED NOTES (DETAIL):

1. EXTEND #12 CONTROL CONDUCTORS IN 1/2" EMT TO SHUNT TRIP BREAKERS FOR KITCHEN EQUIPMENT. (SEE PANEL SCHEDULES).
2. EXTEND MONITORING CONDUCTORS TO FIRE ALARM CONTROL PANEL (FACP).
3. CLOSE GAS SOLENOID VALVE ABOVE ACCESSIBLE CEILING DURING ALARM CONDITION.
4. EXTEND CONTROL CONDUCTORS IN 1/2" EMT TO KEF-1 TO SHUT DOWN DURING A FIRE CONDITION.

3 / E4.0 HOOD FIRE PROTECTION DETAIL
SCALE: NTS

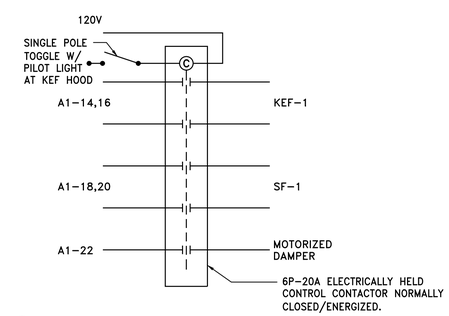

4 / E4.0 KITCHEN EXHAUST CONTROL DIAGRAM
SCALE: N.T.S.

BcJ|A
Brian C. Jackson | Architect LLC
13545 NW Logie Trail Rd.
Hillsboro, OR 97124 P. 503.310.8707
brian@bcjarchitect.com

REGISTERED PROFESSIONAL ENGINEER — OREGON — JULY 20, 1983 — STEPHEN M. LOCKHART
EXPIRES 12-31-18

SENIOR CENTER KITCHEN REHABILITATION

PROJECT - CDBG #8209

FOR:
FOREST GROVE SENIOR CENTER

2037 DOUGLAS STREET
FOREST GROVE, OR 97116

ISSUE		
Mark	Description	Date

DATE	03-13-18
PROJECT NO.	
CAD DWG FILE	
DRAWN BY	
CHECKED BY	BCJ

© copyright Brian C. Jackson, Architect LLC 2012

SHEET TITLE

ONE-LINE
POWER DISTRIBUTION
DIAGRAM

SCALE: NOTED ON DRAWINGS

SHEET E4.0

6915 SW MACADAM AVE.
SUITE 200
PORTLAND, OREGON 97219
PHONE: 503.892.1188
FAX: 503.892.1190
CONTACT...HANK BARLEEN
engineering@mke-inc.com
MKE & ASSOCIATES, INC. CONSULTING ENGINEERS
MECHANICAL AND ELECTRICAL SYSTEMS

PLOTTED: DANIEL DERHEIMER 3/12/2018 11:11 AM
X:\DWG\BJ\4681\4681E40